Index of BLM Orders

601 Declaration of Annual Productive Capacity of the Revested O&C Lands amend 6, 7, 8, 9

602 Filing System for Aerial Photographs

603 Testimony of Employees

604 Per diem allowances (revokes Order 517) Revoked by 696 amend no 2, 3

605 Delegation of Authority for Personnel Management - Amdt. 1

606 **Delegation of Authority to act as Hearings Officer for the Director** Rev. 638

607 Delegation of Authority to Designate Certifying Officers

608 Use of an easel for photograph identification

609 Delegation of Authority - Russellville Office

610 Columbia River Master Unit and Appurtenant Marketing Area for Revested Oregon and California Railroad Grant Lands in Oregon Revoke 626

611 Delegation of Authority - Land Management Incentive Awards Committee - Amdt. 1

612 Field Commissioners - Authority as to contests initiated or filed prior to May 1, 1956

613 Designation of Coeur d'Alene as District Forestry Office

614 Delegation of authority to transfer, donate, or dispose of excess or surplus real property

615 Delegation of Authority - Contracts and Leases cancelled by # 679 Amdts 1-3, 4, 5

616 South Coast Master Unit and Appurtenant Marketing Area for Revested O&C Railroad and Reconveyed Coos Bay Wagon Road Grant Lands in Oregon Revoke 627

617 Siuslaw Master Unit and Appurtenant Marketing Area for Revested O&C Railroad Grant Lands in Oregon Revoke 628

618 Posting of Canceled or Relinquished Mineral Leases and Permits

619 Authorization of an allowance for officers and employees of the Government who are notaries public (amend. 1 - 3/19/63)

620 Fire Protection and Assistance

621 **Distribution of carbon copies on inter-bureau correspondence** (noted on origina

622 Establishment of District Forestry Office at Missoula, Montana

623 Establishment of District Office at Casper, Wyoming

624 Travel by privately-owned automobile

~~624 Delegation of Authority to conduct hearings arising under the Mining Claims Rights Restoration Act of 1955.~~ amdt. 1

625 Appraisal Review Boards

626 **Columbia River Master Unit for Revested O& C Railroad Grant lands in Oregon**

627 **South Coast Matter Unit for Revested O&C Railroad and Reconveyed Coos Bay Wagon Road Grant Lands in Oregon**

628 **Siuslaw Master Unit for Revested O&C Railroad Grant Lands in Oregon**

629 **Alsea-Rickreall Master Unit for Revested O&C Railroad Grant Lands in Oregon**

630 **Klamath Master Unit for Revested O&C Railroad Grant Lands in Oregon**

631 **Jackson Master Unit " " " " " " " "**

632 Josephine Master Unit for Revested O&C Railroad Grant Lands in Oregon

633 South Umpqua " " " " " " " " " "

634 Douglas Master Unit for Revested O&C Railroad and Reconveyed Coos Bay Wagon Road Grant Lands in Oregon

635 Claskamas-Molalla Master Unit for Revested O&C Railroad Grant Lands in Oregon

636 Santiam River Master Unit for Revested O&C Railroad Grant Lands in Oregon

637 Upper Willamette " " " " " " " " " "

638 Delegation of Authority to conduct hearings arising under the Mining Claims Rights Restoration Act of 1955. Revoked by Order No. 684

639 Establishment of Visitors' Register, Amdt. 1

640 Redelegation of Incentive Awards Program

641 Designation of Certifying Officers (Cox, Darnall, Collins), Amdmt 1

642 Delegation of Authority - Real estate leases in Anchorage and Juneau, Alaska

643 Establishment of Check-out system (See Amendment No. 1), Amdt. 2

644 Certification of long-distance telephone calls

645 Delegation of Authority to conduct hearings arising under the Act of August 13, 1954 Revoked by Order 684

646 Motor Vehicle Operator Program

647 Establishment of Dist. Forestry Office at Ukiah, California, Amdt. 1

648 Establishment of Fee for Copies of New Land Records (9/23/57)

649 Delegation of Authority - Travel Revoked by No. 689

650 Establishing District Grazing Office at Bridger, Montana

651 Change of Position Title to District Manager

652 Receipt of applications in Land Offices

653 District Office Nomenclature & Amendment No. 1, Amendment No. 2

654 Allotment and Apportionment of Funds Rescinded - by 697

654 Allotment and Apportionment of Funds - Rescinded by 697

655 Functions of New Orleans Office

656 Establishment of Training Committee Revoked by 670

657 Designation of Tort Claims Officers Superseded by BMRel. 1-1

658 Nondiscriminatory Government Employment Policy in the Department of the Interior REVOKED BY 676

659 Designation of Records Liaison Officers (Washington)

660 Delegation of Authority to Negotiate Contract for Personal or Professional Services (dtd 12/15/59 - Admin. Serv.)

661 Delegation of Authority to Negotiate Contract for Personal or Professional Services (dtd 2/18/60 (AA-4))

662 Follow-up on Audit Findings Revoked by Order 694

663 Delegation of Authority -- Assignment, Transfer and Disposal of Real Property and Related Personal Property REVOKED BY 680

664 Establishment of Preservation of Survey Records Committee ADMT-1-(REVOKED BY AMDT.-1)

665 Use of Fire Extinguishers in Motor Vehicles, Amdt. #1

666 Installation and use of motor vehicle safety seat belts, AMDT #1

667 Survey Records Improvement Project Amdt #1

668 Delegation of Authority in Connection with Appeals to the Director Bureau of Land Management - REVOKED - SEE 678

669 Appraisal Review Boards

670 Bureau Training Committee

671 Delegation of Authority to Negotiate Contracts for professional photogrammetric engineering services - Alaska

672 Policy on Fraternization

673 Delegation of Authority - Administrative Matters

674 Consolidation of Field Offices

675 Redelegation of authority - Incentive Awards Program

676 Nondiscrimination policy in Government employment as announced in the Executive Order 10925 dated ;March 6, 1961, dtd

677 Distribution of Publications

678 Delegation of Authority in Connection with Appeals to the Director Bureau of Land Management REVOKED SEE 683

679 Delegation of Authority - Contracts and Leases, Amend 1 Revoked by 698

680 Delegation of Authority - Transfer and Disposal of Real and Related Personal Property

681 Delegation of Authority - To Dispose of and to Transfer Personal Property

682 Signing of Bureau Correspondence (amdt. 1)

683 Delegation of Authority in Connection with Appeals to the Director, BLM - (revoked by 692)

684 and Amendment 1 - 2 - 3 (REVOKED BY #701)
Redelegations of Authorities concerned with lands and resources

685 Delegation of Authority - Allowances for Quarters, Subsistence and Services

686 Delegation of authority for approving training in non-Government facilities

687 Testimony of Employees - (amend. 1)

688 Establishment of District Office at Riverside, Calif.
Modification of Boundaries of Bakersfield and Sacramento District Ofcs

689 Delegation of Authority - Travel - Amendments 1 - 2 - 3 - SUPERSEDED BY RELEASE - #1-2

690 Delegation of authority - Issuance of Patents (amdt 1) (amend. 2) (amend 3)

691 Area of Responsibility - Baker District Office

692 Delegation of authority in connection w/Appeals to the Director, BLM
SUPERSEDED BY #702 8/13/69

693 Washington Office mail distribution reference codes

694 Followup on audit findings. (amdt. 1)

695 Travel by private-owned automobile - SUPERSEDED BY BM RELEASE #1-2

696 Per Diem Allowances, Amendment 1 - SUPERSEDED BY BM RELEASE #1-2

697 Delegation of Authority for the Allotment and Apportionment of Funds

698 Delegation of Authority - Contracts and Leases AMENDMENTS - 1-2+3+4+5 6-7-8-9-10-11

699 Delegation of Authority - Bureau Signs Program

700 Availability of Copies of Monthly Simultaneous Oil & Gas Lists

701 Redelegations of Authorities concerened with lands and minerals, amend. 1+2

702 Delegation of Authority in Connection w/Appeals to the Director, BLM

703 Delegation of Authority - Administrative Matters

UNITED STATES
DEPARTMENT OF THE INTERIOR
BUREAU OF LAND MANAGEMENT
Washington 25, D. C.

See amendments No. 1, No. 2, 3 & 4 dissent

ORDER NO. 601.

Subject: Declaration of Annual Productive Capacity of the Revested Oregon and California Railroad Grant Lands and Coos Bay Wagon Road Grant Lands

Pursuant to the authority contained in Order No. 2583, Amendment No. 12, September 17, 1954, of the Secretary of the Interior, the annual productive capacities of the Master Units composing the Revested Oregon and California Railroad and the Coos Bay Wagon Road Grant Lands are determined to be as follows:

MASTER UNIT	ANNUAL PRODUCTIVE CAPACITY Feet Board Measure
1. Columbia River	20,500,000
2. Clackamas-Molalla	11,100,000
3. Alsea-Rickreal	34,000,000
4. Santiam River	36,500,000
5. Upper Willamette	53,100,000
6. Siuslaw	57,000,000
7. Douglas	89,400,000
8. South Umpqua	25,500,000
9. South Coast	144,400,000
10. Josephine	48,800,000
11. Jackson	54,700,000
12. Klamath	13,200,000
Total	588,200,000

Section 3 of Secretarial Orders No. 2285, 2380, 2381, 2382, 2383, 2384, 2385, 2386, 2387, 2388, 2389 and 2390 is hereby revoked.

Acting Director

C
O
P
Y

UNITED STATES
DEPARTMENT OF THE INTERIOR
Bureau of Land Management
Washington 25, D. C.

November 21, 1955

ORDER NO. 601, Amendment No. 1

Subject: Declaration of Annual Productive Capacity of the Revested Oregon and California Railroad Grant Lands and Coos Bay Wagon Road Grant Lands

The final paragraph of Bureau Order No. 601 dated October 25, 1955, published in the Federal Register October 29, 1955, Doc 55-8738, is amended to read as follows:

Section 3 of Secretarial Orders No. 2285, 2380, 2381, 2382, 2383, 2384, 2385, 2386, 2387, 2388, 2389 and 2390 is hereby revoked.

(Sgd.) Edward Woozley
Director

UNITED STATES
DEPARTMENT OF THE INTERIOR
Bureau of Land Management
Washington 25, D. C.

February 28, 1956

ORDER NO. 601, Amendment No. 2

Subject: Declaration of Annual Productive Capacity of the Revested Oregon and California Railroad Grant Lands and Coos Bay Wagon Road Grant Lands

The annual productive capacities of the Master Units composing the Revested Oregon and California Railroad Grant Lands and the Coos Bay Wagon Road Grant Lands in Oregon as declared in Bureau Order 601, dated October 25, 1955, are amended as follows:

MASTER UNIT	ANNUAL PRODUCTIVE CAPACITY Feet Board Measure
1. Columbia River	20,500,000
2. Clackamas-Molalla	11,100,000
3. Alsea-Rickreal	34,000,000
4. Santiam River	36,500,000
5. Upper Willamette	53,100,000
6. Siuslaw	57,000,000
7. Douglas	116,300,000
8. South Umpqua	25,500,000
9. South Coast	153,400,000
10. Josephine	48,800,000
11. Jackson	54,700,000
12. Klamath	13,200,000
Total	614,100,000

Director

Route		Initial	Date
I	SS		3/19
2	L&M	MC	3/23
3	F&RM		
4	AA		3/28
	REC		
6	SOL		3/29
	ENGR		
5	C-4	EJP	3/29

Secs. Action
Information
Instr
Ster

95401

DEPT. OF THE INTERIOR
RECEIVED
MAR 9 1956
BUREAU OF LAND MANAGEMENT
STATE OFFICE

UNITED STATES
DEPARTMENT OF THE INTERIOR
Bureau of Land Management
Washington 25, D. C.

5.04c

November 9, 1956

ORDER No. 601, Amendment No. 3

Subject: Declaration of Annual Productive Capacity of the Revested Oregon and California Railroad Grant Lands and Coos Bay Wagon Road Grant Lands

The annual productive capacities of the Master Units composing the Revested Oregon and California Railroad Grant Lands and the Coos Bay Wagon Road Grant Lands in Oregon as declared in Bureau Order 601, dated October 25, 1955, are amended as follows:

MASTER UNIT	ANNUAL PRODUCTIVE CAPACITY Feet Board Measure
1. Columbia River	~~20,500,000~~ 36,000,000
2. Clackamas-Molalla	18,000,000
3. Alsea-Rickreall	51,000,000
4. Santiam River	44,500,000
5. Upper Willamette	61,100,000
6. Siuslaw	57,000,000
7. Douglas	106,300,000
8. South Umpqua	25,500,000
9. South Coast	160,100,000

MASTER UNIT	ANNUAL PRODUCTIVE CAPACITY Feet Board Measure
10. Josephine	48,800,000
11. Jackson	54,700,000
12. Klamath	13,200,000
Total	~~660,700,000~~ 676,200,000

Director

Distribution:

BLM Order List

7003

UNITED STATES
DEPARTMENT OF THE INTERIOR
Bureau of Land Management
Washington 25, D. C.

November 9, 1956

ORDER No. 601, Amendment No. 3

Subject: Declaration of Annual Productive Capacity of the Revested Oregon and California Railroad Grant Lands and Coos Bay Wagon Road Grant Lands

The annual productive capacities of the Master Units composing the Revested Oregon and California Railroad Grant Lands and the Coos Bay Wagon Road Grant Lands in Oregon as declared in Bureau Order 601, dated October 25, 1955, are amended as follows:

MASTER UNIT	ANNUAL PRODUCTIVE CAPACITY Feet Board Measure
1. Columbia River	20,500,000
2. Clackamas-Molalla	18,000,000
3. Alsea-Rickreall	51,000,000
4. Santiam River	44,500,000
5. Upper Willamette	61,100,000
6. Siuslaw	57,000,000
7. Douglas	106,300,000
8. South Umpqua	25,500,000
9. South Coast	160,100,000

MASTER UNIT	ANNUAL PRODUCTIVE CAPACITY Feet Board Measure
10. Josephine	48,800,000
11. Jackson	54,700,000
12. Klamath	13,200,000
Total	660,700,000

Edward Woozley
Director

Distribution:

BLM Order List

7003

UNITED STATES
DEPARTMENT OF THE INTERIOR
Bureau of Land Management
Washington 25, D. C.

Published in FR 8/28/57
p. 7749

September 20, 1957

ORDER NO. 601, Amendment No. 4

Subject: Declaration of Annual Productive Capacity of the Revested Oregon and California Railroad Grant Lands and Coos Bay Wagon Road Grant Lands

The annual productive capacities of the Master Units composing the Revested Oregon and California Railroad Grant Lands and the Coos Bay Wagon Road Grant Lands in Oregon as declared in Bureau Order 601, dated October 25, 1955, are amended as follows:

MASTER UNIT	ANNUAL PRODUCTIVE CAPACITY Feet Board Measure
1. Columbia River	36,000,000
2. Clackamas-Molalla	18,000,000
3. Alsea-Rickreall	51,000,000
4. Santiam River	44,500,000
5. Upper Willamette	61,100,000
6. Siuslaw	57,000,000
7. Douglas	106,300,000
8. South Umpqua	25,500,000
9. South Coast	160,100,000
10. Josephine	48,800,000
11. Jackson	54,700,000
12. Klamath Total	13,200,000
	676,200,000

/s/ Edward Woozley

Director

Distribution:

BLM Order List

DEPARTMENT OF THE INTERIOR

Bureau of Land Management

[Order 601, Amdt. 4]

REVESTED OREGON AND CALIFORNIA RAILROAD GRANT LANDS AND COOS BAY WAGON ROAD GRANT LANDS

DECLARATION OF ANNUAL PRODUCTIVE CAPACITY

SEPTEMBER 20, 1957.

The annual productive capacities of the Master Units composing the Revested Oregon and California Railroad Grant Lands and the Coos Bay Wagon Road Grant Lands in Oregon as declared in Bureau Order 601, dated October 25, 1955, are amended as follows:

Master unit	*Annual Productive Capacity (feet, board measure)*
1. Columbia River	36, 000, 000
2. Clackamas-Molalla	18, 000, 000
3. Alsea-Rickreall	51, 000, 000
4. Santiam River	44, 500, 000
5. Upper Willamette	61, 100, 000
6. Siuslaw	57, 000, 000
7. Douglas	106, 300, 000
8. South Umpqua	25, 500, 000
9. South Coast	160, 100, 000
10. Josephine	48, 800, 000
11. Jackson	54, 700, 000
12. Klamath	13, 200, 000
Total	676, 200, 000

EDWARD WOOZLEY,
Director.

[F. R. Doc. 57-7981; Filed, Sept. 27, 1957; 8:46 a. m.]

B

[illegible]

[illegible]

Order No. 603, Amendment No. [illegible]

Subject: Establishing of Annual Productive Capacity of the Revested Oregon and California Railroad and Coos Bay Wagon Road Grant Lands

The annual productive capacities of the Revested Oregon and California Railroad Grant Lands and the Coos Bay Wagon Road Grant Lands in Oregon as established in Revised Order 603, dated October 28, 1958, are amended to read as follows:

MASTER UNIT	ANNUAL SUSTAINED YIELD CAPACITY (Board Feet)
1. Columbia River	[illegible]
2. Clackamas-Molalla	10,000,000
3. Alsea-Siskiyou	[illegible]
4. Santiam River	[illegible]
5. Upper Willamette	[illegible]
6. Siuslaw	57,000,000
7. Douglas	[illegible]
8. South Umpqua	[illegible]
9. South Coast	[illegible],100,000
10. Josephine	[illegible]
11. Jackson	54,[illegible]000
12. Klamath	[illegible]
Total	[illegible]

/s/ Edward [illegible]

Director

Distribution:

BLM Order List

B

[illegible]
[illegible]
Bureau of Land Management
Washington 25, D. C.

October 30, 1957

[illegible]

Subject: Determination of annual productive capacity of the [illegible] Oregon and California Railroad and Coos Bay Wagon Road Grant Lands

The annual productive capacities of the Master Units comprising the Revested Oregon and California [illegible] Coos Bay Wagon Road Grant Lands in Oregon as defined in Public Land Order No. 600, dated December 31, 1957, are [illegible]

[illegible]		[illegible]
1.	Columbia River	36,000,000
2.	Clackamas-Molalla	18,000,000
3.	Alsea-Rickreall	51,000,000
4.	Santiam River	47,000,000
5.	Upper Willamette	62,900,000
6.	Siuslaw	62,200,000
7.	Douglas	112,800,000
8.	South Umpqua	25,500,000
9.	South Coast	160,100,000
10.	Josephine	48,800,000
11.	Jackson	54,700,000
[illegible]	[illegible]	[illegible]
	Total	692,200,000

UNITED STATES
DEPARTMENT OF THE INTERIOR
Bureau of Land Management
Washington 25, D.C.

July 3, 1958

ORDER NO. 601 Amendment No. 6

Subject: Declaration of Annual Productive Capacity of the Revested Oregon and California Railroad Grant Lands and Coos Bay Wagon Road Grant Lands

The annual productive capacities of the Master Units composing the Revested Oregon and California Railroad Grant Lands and the Coos Bay Wagon Road Grant Lands in Oregon as declared in Bureau Order No. 601, dated October 25, 1955, are amended as follows:

MASTER UNIT	ANNUAL PRODUCTIVE CAPACITY Feet Board Measure
1. Columbia River	36,000,000
2. Clackamas-Molalla	18,000,000
3. Alsea-Nickreall	51,000,000
4. Santiam River	47,000,000
5. Upper Willamette	62,900,000
6. Siuslaw	79,100,000
7. Douglas	112,600,000
8. North Umpqua	32,500,000
9. South Coast	160,100,000
10. Josephine	102,000,000
11. Jackson	54,700,000
12. Klamath	13,200,000
Total	769,300,000

/s/ Charles P. Mead

Acting Director

Distribution:

[illegible]

SS

B

UNITED STATES
DEPARTMENT OF THE INTERIOR
Bureau of Land Management
Washington 25, D. C.

April 1, 1959

ORDER NO. 601 Amendment No. 7

Subject: Declaration of Annual Productive Capacity of the Revested Oregon and California Railroad Grant Lands and Coos Bay Wagon Road Grant Lands

The annual productive capacities of the Master Units composing the Revested Oregon and California Railroad Grant Lands and the Coos Bay Wagon Road Grant Lands in Oregon as declared in Bureau Order No. 601, dated July 9, 1958, are amended as follows:

MASTER UNIT	ANNUAL PRODUCTIVE CAPACITY Feet Board Measure
1. Columbia River	47,500,000
2. Clackamas-Molalla	24,000,000
3. Alsea-Rickreall	60,000,000
4. Santiam River	51,200,000
5. Upper Willamette	74,900,000
6. Siuslaw	79,100,000
7. Douglas	123,900,000
8. South Umpqua	32,500,000
9. South Coast	160,100,000
10. Josephine	120,000,000
11. Jackson	78,000,000
12. Klamath	23,000,000
Total	874,200,000

/s/ Edward Woozley
Director

Distribution:

BLM ORDER LIST

UNITED STATES
DEPARTMENT OF THE INTERIOR
Bureau of Land Management
Washington 25, D. C.

June 29, 1962

Order No. 601 Amendment No. 8

Subject: Declaration of Annual Productive Capacity of the Revested Oregon and California Railroad Grant Lands, Coos Bay Wagon Road Grant Lands and intermingled Public Domain lands.

The annual productive capacities of the Master Units composing the Revested Oregon and California Railroad Grand Lands, and the Coos Bay Wagon Road Grant Lands in Oregon declared in Bureau Order No. 601, Amendment No. 7, dated April 1, 1959, are amended as follows:

MASTER UNIT	ANNUAL PRODUCTIVE CAPACITY Feet Board Measure
1. Columbia River	59,000,000
2. Clackamas-Molalla	34,000,000
3. Alsea-Rickreall	90,000,000
4. Santiam River	61,000,000
5. Upper Willamette	77,000,000
6. Siuslaw	82,000,000
7. Douglas	135,000,000
8. South Umpqua	28,000,000
9. South Coast	173,000,000
10. Josephine	129,000,000
11. Jackson	86,000,000
12. Klamath	23,000,000
Total	977,000,000

Annual Productive Capacity as declared in this amendment, includes the Revested Oregon and California Railroad and Reconveyed Coos Bay Wagon Road Grant Lands, other lands administered by the Bureau under provisions of the act approved August 28, 1937, and the public lands administered by the Bureau of Land Management which are in Oregon west of Range 8 E., Willamette Meridian, Oregon.

James F. Doyle
Acting Director

Distribution:
BLM Order List

11037-62

DEPARTMENT OF THE INTERIOR

Bureau of Land Management

[Order 601 Amdt. 8]

REVESTED OREGON AND CALIFORNIA RAILROAD GRANT LANDS, COOS BAY WAGON ROAD GRANT LANDS AND PUBLIC DOMAIN LANDS

Declaration of Annual Productive Capacity

JUNE 29, 1962.

The annual productive capacities of the Master Units composing the Revested Oregon and California Railroad Grant Lands, and the Coos Bay Wagon Road Grant Lands in Oregon declared in Bureau Order No. 601, Amendment No. 7, dated April 1, 1959, are amended as follows:

Master unit:	*Annual productive capacity, feet board measure*
1. Columbia River	59,000,000
2. Clackamas-Molalla	34,000,000
3. Alsea-Rickreall	90,000,000
4. Santiam River	61,000,000
5. Upper Willamette	77,000,000
6. Siuslaw	82,000,000
7. Douglas	135,000,000
8. South Umpqua	28,000,000
9. South Coast	173,000,000
10. Josephine	129,000,000
11. Jackson	86,000,000
12. Klamath	23,000,000
Total	977,000,000

Annual Productive Capacity as declared in this amendment, includes the Revested Oregon and California Railroad and Reconveyed Coos Bay Wagon Road Grant Lands, other lands administered by the Bureau under provisions of the act approved August 28, 1937, and the public lands administered by the Bureau of Land Management which are in Oregon west of Range 8 E., Willamette Meridian, Oregon.

JAMES F. DOYLE,
Acting Director.

[F.R. Doc. 62-6636; Filed, July 6, 1962; 8:48 a.m.]

UNITED STATES
DEPARTMENT OF THE INTERIOR
Bureau of Land Management
Washington 25, D. C.

July 25, 1962

Order No. 601 Amendment No. 9

Subject: Declaration of Annual Productive Capacity of the Revested Oregon and California Railroad Grant Lands, Coos Bay Wagon Road Grant Lands and intermingled Public Domain Lands.

The annual productive capacities of the Master Units composing the Revested Oregon and California Railroad Grant Lands, the Coos Bay Wagon Road Grant Lands and the intermingled and adjacent public domain areas in Oregon declared in Bureau Order No. 601, Amendment No. 8 dated June 29, 1962, are amended as follows:

MASTER UNIT	ANNUAL PRODUCTIVE CAPACITY Feet Board Measure
1. Columbia River- - - - - - - -	68,000,000
2. Clackamas-Molalla- - - - - - -	36,000,000
3. Alsea-Rickreall- - - - - - - -	99,000,000
4. Santiam River- - - - - - - - -	64,000,000
5. Upper Willamette- - - - - - -	91,000,000
6. Siuslaw- - - - - - - - - - - - -	82,000,000
7. Douglas- - - - - - - - - - - - -	154,000,000
8. South Umpqua- - - - - - - - -	33,000,000
9. South Coast- - - - - - - - - -	228,000,000
10. Josephine- - - - - - - - - - -	147,000,000
11. Jackson- - - - - - - - - - - -	98,000,000
12. Klamath- - - - - - - - - - - -	27,000,000
Total- - - - - - - - - -	1,127,000,000

Annual Productive Capacity as declared in this amendment, includes the Revested Oregon and California Railroad and Reconveyed Coos Bay Wagon Road Grant Lands, other lands administered by the Bureau under provisions of the act approved August 28, 1937, and the public lands administered by the Bureau of Land Management which are in Oregon west of Range 8 E., Willamette Meridian, Oregon.

(Sgd) Karl S. Landstrom
Director

Distribution:
BLM Order List

DEPARTMENT OF THE INTERIOR

Bureau of Land Management

[Bureau Order No. 601 Amdt. 10]

REVESTED OREGON AND CALIFORNIA RAILROAD GRANT LANDS ET AL.

Declaration of Annual Productive Capacity

APRIL 7, 1971.

The annual productive capacities of the Master Units composing the Revested Oregon and California Railroad Grant Lands, the Coos Bay Wagon Road Grant Lands and the intermingled and adjacent public domain areas in Oregon declared in Bureau Order No. 601, Amendment No. 9 dated July 25, 1962, are amended as follows:

Master Unit:	*Annual productive capacity (feet board measure)*
1. Columbia River	77,000,000
2. Clackamas-Molalla	32,000,000
3. Alsea-Rickreall	81,000,000
4. Santiam River	54,000,000
5. Upper Willamette	109,000,000
6. Siuslaw	110,000,000
7. Douglas	158,000,000
8. South Umpqua	43,000,000
9. South Coast	234,000,000
10. Josephine	146,000,000
11. Jackson	103,000,000
12. Klamath	25,000,000
Total	1,172,000,000

Annual Productive Capacity as declared in this amendment, includes the Revested Oregon and California Railroad and Reconveyed Coos Bay Wagon Road Grant Lands, other lands administered by the Bureau under provisions of the act approved August 28, 1937, and the public lands administered by the Bureau of Land Management which are in Oregon west of Range 8 E., Willamette Meridian, Oreg.

This order shall be effective as of July 1, 1971.

BOYD L. RASMUSSEN,
Director.

[FR Doc.71-5093 Filed 4-9-71;8:50 am]

BUREAU ORDER DISTRIBUTION LIST
Published in 36 FR 6906, April 10, 1971

AERIAL PHOTO INDEX NUMBERS

M-

4-

A-

3-

2-

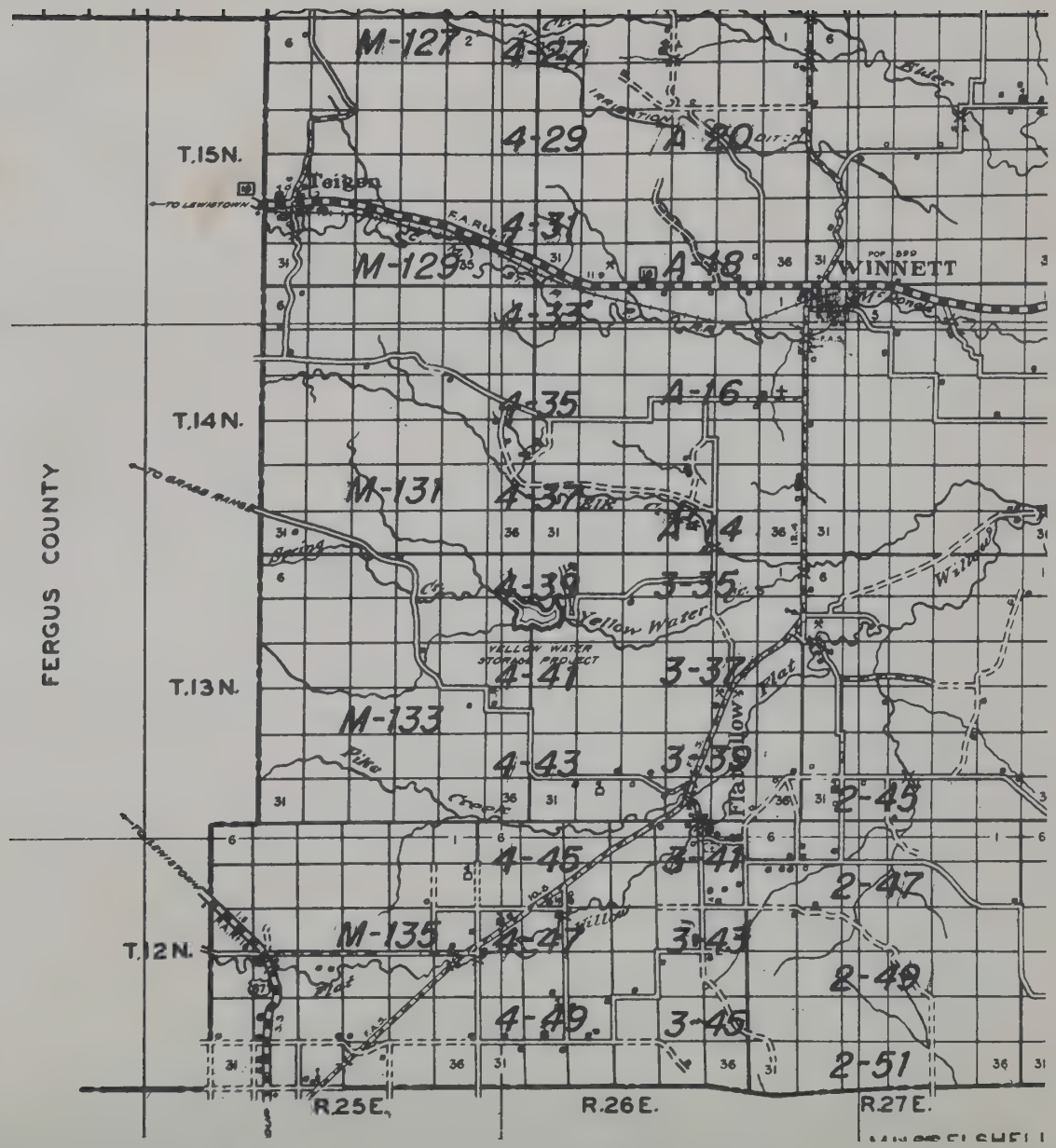

90235

UNITED STATES
DEPARTMENT OF THE INTERIOR
Bureau of Land Management
Washington 25, D. C.

5.04d

November 22, 1955

Order No. 602

Subject: Filing system for aerial photographs

Based upon a management-improvement suggestion, effective immediately all aerial photographs will be given flight numbers and an index map prepared as a key for locating photographs. The map should be prepared covering a large area, or a whole district to effect maximum use of the system. A sample is attached. By this method it will be necessary only to locate the coverage desired on the map, refer to the flight number, and remove the photograph from a numerical file. Some refinement of the system may be allowed where there is a duplication of numerical series, combinations of numbers and letters, or where photographs varying in size need special filing requirements.

Edward Woozley
Director

Attachment

Distribution:

Assistant to the Director -	2
Executive Officer	1
Area Administrators	3
State Supervisors	2
District Grazing Offices	1
Range Management Officer	5
Washington Staff Officers	1
L. Miller	2

Miller

603

Revoked by 68

ORDER NO. 603

Subject: Testimony of Employees

1. Section 2.21 of Title 43, CFR, provides in part that an officer or employee of this Department is prohibited from giving testimony, in a judicial or administrative proceeding concerning matters related to the business of the Government, or the contents of official records, unless a request for such testimony is made by the person or public agency wishing to obtain the testimony, and the giving of the testimony is authorized by the head of the bureau or office, or his designee.

2. Pursuant to the authority contained in the above-mentioned section, each Area Administrator may authorize any officer or employee of his Area to testify in a judicial or administrative proceeding concerning matters related to the business of the Government or the contents of official records whenever a written request for such testimony is received and, in the opinion of the Area Administrator, permission to give the testimony should be granted.

3. If the Area Administrator is of the opinion that a request should be denied, the request should be forwarded to the Director with an appropriate recommendation.

4. Bureau Order No. 527, of August 18, 1953, is hereby revoked.

Byrne Falck
Acting Director

Distribution:

L-1 Mailing List
Washington Staff Officers

[illegible]

IN REPLY REFER TO:

5.02

UNITED STATES
DEPARTMENT OF THE INTERIOR
BUREAU OF LAND MANAGEMENT
WASHINGTON 25, D. C.

Revoked by 687

DEC 6 1956

ORDER NO. 603

Subject: Testimony of Employees

(2.20?)

1. Section 2.21 of Title 43, CFR, provides in part that an officer or employee of this Department is prohibited from giving testimony, in a judicial or administrative proceeding concerning matters related to the business of the Government, or the contents of official records, unless a request for such testimony is made by the person or public agency wishing to obtain the testimony, and the giving of the testimony is authorized by the head of the bureau or office, or his designee.

2. Pursuant to the authority contained in the above-mentioned section, each Area Administrator may authorize any officer or employee of his Area to testify in a judicial or administrative proceeding concerning matters related to the business of the Government or the contents of official records whenever a written request for such testimony is received and, in the opinion of the Area Administrator, permission to give the testimony should be granted.

3. If the Area Administrator is of the opinion that a request should be denied, the request should be forwarded to the Director with an appropriate recommendation.

4. Bureau Order No. 527, of August 18, 1953, is hereby revoked.

Acting Director

See 687

Distribution:

L-1 Mailing List
Washington Staff Officers

1. Section 3.31 of Title 43, CFR, provides in part that [illegible] or employee of this Department is prohibited from giving [illegible], in a judicial or administrative proceeding concerning [illegible] ted to the business of the Government, or the contents [illegible] l records, unless a request for such testimony is made by [illegible] or public agency wishing to obtain the testimony, and [illegible] ling of the testimony is authorized by the head of the bureau [illegible] ce, or his designee.

2. Pursuant to the authority contained in the above-[illegible] l section, each Area Administrator may authorize any [illegible] or employee of his Area to testify in a judicial or [illegible] rative proceeding concerning matters related to the business [illegible] ment or the contents of official records whenever a [illegible] request for such testimony is received and, in the opinion [illegible] Area Administrator, permission to give the testimony should [illegible] ted.

3. If the Area Administrator is of the opinion that a [illegible] should be denied, the request should be forwarded to the [illegible] with an appropriate recommendation.

Revised
September 6, 1956

DISTRIBUTION LIST FOR BUREAU ORDERS

Each Area Administrator	20	80
Each State Office (incl. ESO and LA)	10	160
Each Land Office	5	16
Each District Forestry Office	2	20
Each District Grazing Office	2	104
~~Roseville~~ St Paul Office	2	2
New Orleans Office	~~1~~ 2	2
		384

FIELD COMMISSIONERS

1001 N.E. Lloyd Blvd. Portland 14, Oregon Hearing Examiners	1 ea.	8
310 Boston Building Salt Lake City, Utah	~~1~~	
~~Branch of Field Services~~	~~3~~	
~~Eastern States Office~~	5 ~~10~~	
Washington Staff Offices	2 each	42
~~Assistant to the State Supervisor~~ ~~215 W. 7th St.~~ ~~Los Angeles, California~~	~~1~~	
		434

UNITED STATES
DEPARTMENT OF THE INTERIOR
Bureau of Land Management
Washington 25, D. C.

January 27, 1955

ORDER NO. 604

Subject: Per Diem Allowances

Revokes 517
See amendment 701 to 604 - 3/24/55

~~Purpose~~

In accordance with the provisions of Section 7 of the Secretary of the Interior's Order No. 2617, dated February 21, 1952, and the Standardized Government Travel Regulations, the following limitations are placed on the authorization of per diem.

a. Maximum per diem allowance - first 60 days.

The maximum per diem allowance for travel within or outside the continental United States may not be authorized in excess of sixty days at one temporary duty station.

b. Maximum per diem allowance - after first 60 days.

The maximum which may be authorized after 60 days at a temporary duty station is $9.00.

c. Other per diem rates.

The rates prescribed in a. and b. are the maxima. A lower rate should be authorized whenever circumstances so indicate.

d. Order No. 517 dated May 25, 1953, is revoked.

Director

Revoked by 696

Distribution:
- Branch of Administrative Services - 50
- Branch of Budget & Finance - 20
- Area Administrators - 40 each
- Eastern States Supervisor - 10
- Washington Office:
  - Each staff officer - 1
  - Assistant to the Director - 10

UNITED STATES
DEPARTMENT OF THE INTERIOR
Bureau of Land Management
Washington 25, D. C.

this order 11-23-
Revoked 579

March 29, 1956

ORDER NO. 604, AMENDMENT NO. 1

Subject: Per Diem Allowances

Order No. 604 dated January 23, 1956 is amended as follows:

b. Maximum per diem allowance - after first 60 days.

The maximum which may be authorized after 60 days at a temporary duty station is $9.00 in the United States and $11.00 in Alaska.

Director

Distribution:
- Branch of Administrative Services - 50
- Branch of Budget & Finance - 20
- Area Administrators - 40 each
- Eastern States Supervisor - 10
- Washington Office:
  - Each staff officer - 1
  - Assistant to the Director - 10

Revoked by 696

[illegible]

[illegible]
Bureau of Land Management
Washington 25, D. C.

June 1[illegible], 1958

[illegible]

[illegible]

Order No. 604 dated January 23, 1956 is amended as follows:

b. Maximum per diem allowance - after first 30 days

[illegible]

temporary duty station is $9.00 in the United States and $11.00 in Alaska. In the determination of the 30-day period, absence on official business from temporary duty station of more than one week will constitute a break in the 30-day period.

[illegible]
Director

Revoked by 696

[illegible]

Branch of Budget & Finance - 20
Area Administrators - 40 each
Western Service Supervisor - 10
Washington Office:
Each staff officer - 1
Assistant to the Director - 10

UNITED STATES
DEPARTMENT OF THE INTERIOR
Bureau of Land Management

June 1, 1959

ORDER NO. 604, Amendment No. 3

Subject: Per Diem Allowances

Order No. 604, dated January 23, 1956, is amended as follows:

b. Maximum per diem allowance - after first 60 days

The maximum which may be authorized after 60 days at a temporary duty station is $9.00 in the United States and $15.00 in Anchorage, Fairbanks, and Juneau, Alaska. A maximum of $11.00 may be authorized after 60 days at other points in Alaska. In determination of the 60-day period, absence on official business from temporary duty station of more than one week will constitute a break in the 60-day period.

/s/ Edward Woozley
Director

Revoked by 646

Branch of Administrative Services	- 50
Branch of Budget and Finance	- 20
Area Administrators	- 40 each
Eastern States Supervisor	- 10
Washington Office:	
Each Staff Officer	1
Assistant to the Director	10

1400-250
1214.1

Superseded by BLM Manual IV 73.1 et seq.

persons are designated to administer oaths only.

except where

Laboratories - 5 each
Supervisors - 5 each
Local Office Managers - 1 each
District Analog Office Managers - 1 each
Technicians " 1 each
Area Staff Officers - 1 each
Area Director - 5

UNITED STATES
DEPARTMENT OF THE INTERIOR
Bureau of Land Management
Washington 25, D. C.

FEB 3 1956

ORDER NO. 606

SUBJECT: Delegation of authority to act as Hearings Officer for the Director

1. Pursuant to Section 1.5 of Secretarial Order No. 2583, as amended February 16, 1954 (19 F. R. 1021), the State Supervisors in the respective States and the Operations Supervisor in Alaska, are hereby designated to perform the functions of Hearings Officers in carrying out the provisions of Public Law 359, 84th Congress.

2. The above-designated persons are authorized to conduct and preside at hearings provided for by this law in their respective States and Territory and to render decisions thereon.

3. They shall conduct such proceedings and shall take all necessary actions with respect thereto, including the issuance of decisions, as provided by the law. Such actions shall be subject to the right of appeal to the Director. All actions in a proceeding before them shall be signed by the designees as "Hearings Officer".

Director

UNITED STATES
DEPARTMENT OF THE INTERIOR
Bureau of Land Management
Washington 25, D. C.

FEB 5 1964

Order No. 606

SUBJECT: Delegation of authority to act as hearing officer for the Director

1. Pursuant to Section 3.2 of Departmental Order No. 2365, as amended February 14, 1958 (23 F. R. 1021), the State Supervisors in the respective States and the Operations Supervisor in Alaska, are hereby designated to perform the functions of hearing officers in carrying out the provisions of Public Law 359, 84th Congress.

2. The above-designated persons are authorized to conduct and preside at hearings provided for by this law in their respective States and Territory and to render decisions thereon.

3. They shall conduct such proceedings and shall take all necessary actions with respect thereto, including the issuance of decisions, as provided by the law. Such decisions shall be subject to the right of appeal to the Director. All actions in a proceeding before them shall be signed by the designees as "Hearings Officer".

Director

1300
1214.1

UNITED STATES
DEPARTMENT OF THE INTERIOR
Bureau of Land Management
Washington, D. C.

February 8, 1956

BLM ORDER NO. 607

Subject: Delegation of Authority to Designate Certifying Officers

Pursuant to authority contained in Section 1 of Secretary of the Interior's Order No. 2807, dated December 29, 1955, the authority to designate authorized certifying officers is redelegated to Area Administrators, Area Administrative Officers, the Executive Officer, and the Chief of the Branch of Budget and Finance of the Division of Operations.

/s/ Depue Falck

Acting Director

Distribution:
20 Branch of Budget and Finance
40 each - Area Administrators
1 Alaska Operations Supervisor
10 Eastern States Supervisor
Washington office:
1 Each Staff Officer
10 Assistant to the Director

UNITED STATES
DEPARTMENT OF THE INTERIOR
Bureau of Land Management
Washington 25, D. C.

5.04d

February 8, 1956

Order No. 608

Subject: Use of an easel for photograph identification

A management-improvement suggestion has been made which provides a standardized method for identifying official BLM pictures by use of a photograph easel. It is economical and easy to construct, compact for easy carrying, and has proven to be durable under field conditions. It was designed especially for photographing range study areas but may be used for most any type of photography where an identification system is needed. The dimensions of the easel may be changed as necessary to provide for a different size or height to meet special requirements. A drawing showing construction detail is attached. Offices which are not already using an identification system similar to the one described should provide themselves with this photograph easel.

Acting Director

Attachment
Distribution:

Executive Officer	- 1
Area Administrators	- 3
State Supervisors	- 2
District Grazing Offices	- 1
Range Management Officer	- 5
Washington Staff Officers	- 1
L. Miller	- 2

AERIAL PHOTO
INDEX NUMBERS

M-

4-

A-

3-

2-

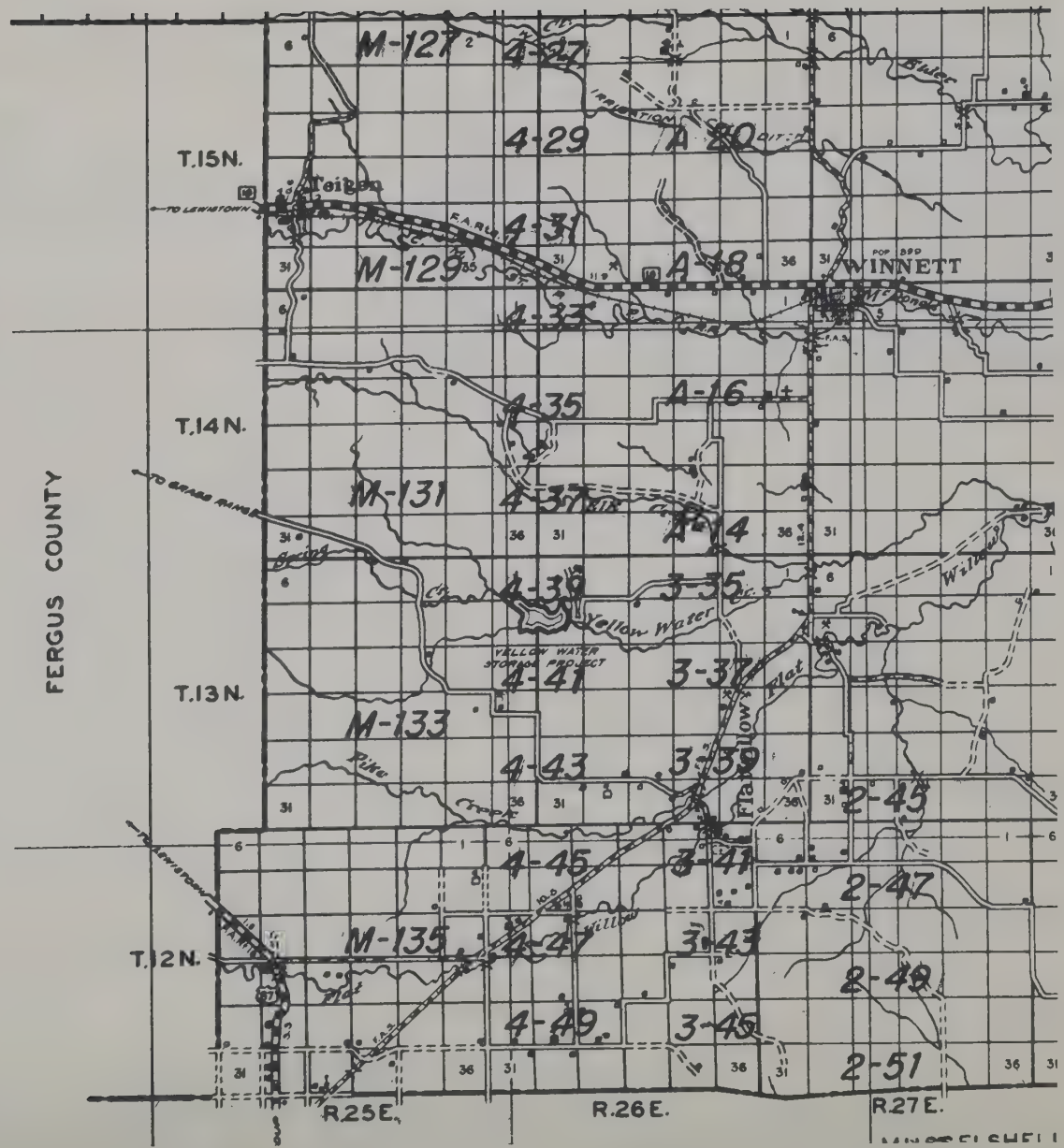

90235

IDENTIFICATION EASEL FOR RANGE PHOTOGRAPHY

Front View

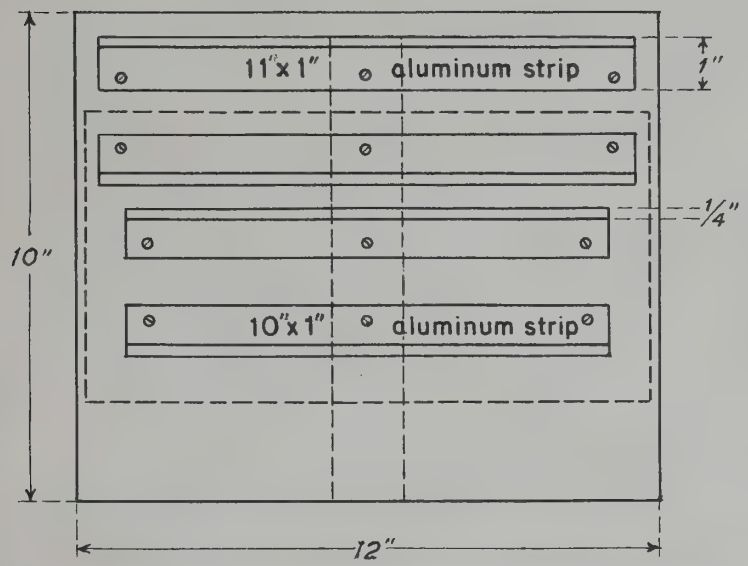

Side View

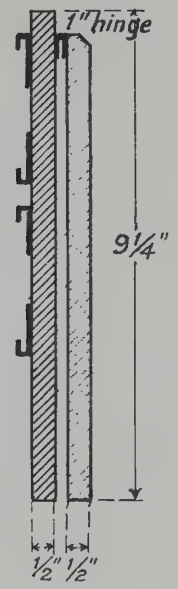

Back View

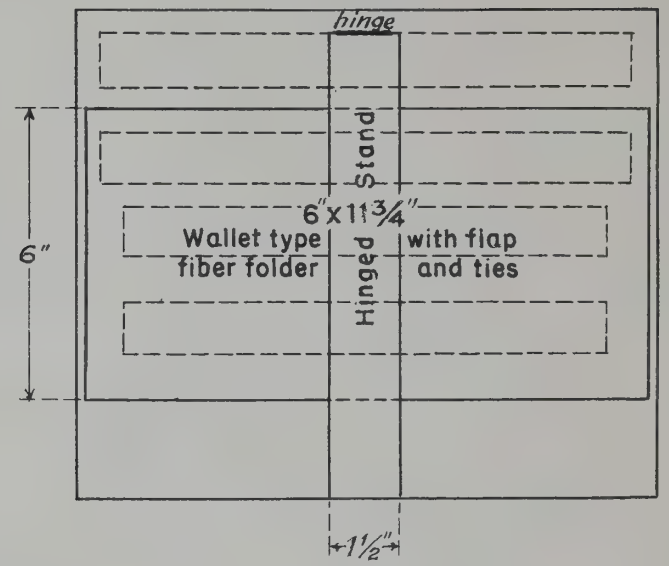

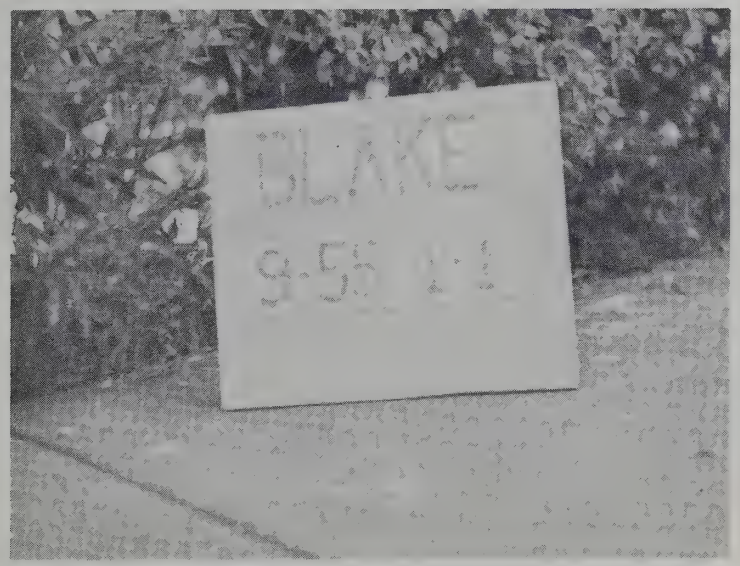

MATERIALS USED

44" of	1-5/16" Aluminum Strip	16	$\frac{1}{2}$" #4 Wood Screws
1 piece	10 x 12" Plywood	1	6" x 11-3/4" Wallet type fiber folder with flap and ties
1 "	$9\frac{1}{2}$ x $1\frac{1}{2}$ x $\frac{1}{2}$ Wood		
1	1" Hinge		

Estimated cost $1.00

A wallet type fiber folder with flaps and ties is stapled to back of placard for storing and transporting materials.

Transect names, numbers, and dates are printed on cards and inserted into metal slides for photographing.

91081

FEB 17 1956

Order No. 609

Subject: Delegation of Authority - Russellville Office

All authority previously delegated to the District Forester of the District Forestry Office at Russellville, Arkansas, is hereby delegated to the Ranger of the Bureau of Land Management Office at Russellville, Arkansas.

(Sgd.) E. J. Thomas

Acting Director

UNITED STATES
DEPARTMENT OF THE INTERIOR
Bureau of Land Management
Washington 25, D. C.

MAR 1 1955

ORDER NO. 610

Subject: Columbia River Master Unit and Appurtenant Marketing Area for Revested Oregon and California Railroad Grant Lands in Oregon

Pursuant to the authority contained in Section 1 of the Act of August 28, 1937 (50 Stat. 874), and in Order No. 2583, Amendment No. 12, September 17, 1954, of the Secretary of the Interior it is hereby ordered as follows:

1. The boundaries of the Columbia River Master Unit, established by Order 2388, November 29, 1947 of the Secretary of the Interior, are as follows:

Beginning at the NW corner of Sec. 31, T. 5 N., R. 3 W., W.M., Oregon, thence east 12 miles; south 19 miles to the SE corner of Sec. 36, T. 2 N., R. 2 W.; west 6 miles; south 23 miles to the Willamette River at the NE corner of Sec. 36, T. 3 S., R. 3 W.; southerly along said river to Yamhill, Polk County line on south boundary of Sec. 4, T. 6 S., R. 3 W.; west 18 miles to the SE corner Sec. 5, T. 6 S., R. 6 W.; thence following the line of legal subdivision; southerly 6 miles; westerly 10 miles to the south ¼ corner of Sec. 12 T. 7 S., R. 8 W.; northerly 18 miles to the SE corner sec. 13, T. 4 S., R. 8 W.; west 4 miles; north 18 miles; east 16 miles to the SE corner Sec. 13, T. 1 S., R. 6 W.; north 3 miles; east 12 miles to the SW corner Sec. 31, T. 1 N., R. 3 W.; north 25 miles to place of beginning, as shown in detail on the map entitled "Map of Western Oregon, showing O. and C. Lands," dated September 18, 1947, on file in the Bureau of Land Management, Department of the Interior, Washington, D. C., and in Portland, Eugene, Salem, Roseburg, Coos Bay and Medford, Oregon.

UNITED STATES
DEPARTMENT OF THE INTERIOR
Bureau of Land Management
Washington 25, D. C.

ORDER NO. 1317

Subject: Columbia River Water Tank and Appurtenant Servicing Area
for Interstate Oregon and California Railroad Grant Lands
in Oregon

Pursuant to the authority contained in Section 1 of the Act of August 24, 1937 (50 Stat. 874), and in Order No. 2583, Amendment No. 12, September 17, 1954, of the Secretary of the Interior it is hereby ordered as follows:

1. The boundaries of the Columbia River Water Tank, established by Order 2583, November 29, 1947 of the Secretary of the Interior, are as follows:

Beginning at the NE corner of Sec. 21, T. 5 S., R. 3 W., W.M., Oregon, thence east 12 miles; north 12 miles to the SE corner of Sec. 28, T. 3 N., R. 3 W.; west 5 miles; south 22 miles to the Columbia River at the SE corner of Sec. 32, R. 5 S., R. 3 W.; southerly along said river to Tenmile, Polk County line on south boundary of Sec. 6, T. 6 S., R. 3 W.; west 12 miles to the SE corner Sec. 1, T. 6 S., R. 6 W.; thence following the line of legal subdivision; southerly 5 miles; westerly 10 miles to the south ¼ corner of Sec. 11 T. 7 S., R. 6 W.; northerly 12 miles to the NE corner sec. 14, T. 6 S., R. 6 W.; west 4 miles; north 12 miles; east 12 miles to the SE corner Sec. 12, T. 5 S., R. 6 W.; north 3 miles; east 12 miles to the NE corner Sec. 21, T. 5 S., R. 3 W.; north 22 miles to place of beginning, as shown in detail on the map entitled "Map of Columbia Oregon, showing C. and O. Lands," dated September 13, 1947, on file in the Bureau of Land Management, Department of the Interior,

2. The boundaries of the Columbia River Master Unit Marketing Area, established by Order 2388, November 29, 1947 of the Secretary of the Interior, are amended to read as follows:

All of the Master Unit itself and in addition an area outside thereof bounded by a line commencing on the Unit Boundary at the SW corner Sec. 36, T. 6 S., R. 8 W., W.M., Oregon, thence west 20 miles to the Pacific Ocean; northerly along the coast line to the mouth of the Columbia River, easterly along the Columbia River to the township line between T. 5 and 6 N; east 3 miles; south 18 miles to the SW corner, Sec. 31, T. 3 N., R. 1 E.; east 6 miles; south 6 miles; east 12 miles to the NE corner Sec. 1, T. 1 N., R. 3 E.; south 6 miles; east 3 miles; south 9 miles to the SE corner Sec. 16, T. 2 S., R. 4 E.; west 9 miles; south 9 miles; west 6 miles to the NW corner Sec. 6, T. 4 S., R. 2 E.; south 12 miles; west 21 miles to the Unit boundary on the Willamette River, as shown in detail on the map referred to above.

This Order supersedes Order 2388 of the Secretary of the Interior, dated November 29, 1947. Any part or all of this order may be hereafter amended if such action shall be found to be in the public interest.

Director

2. The boundaries of the Columbia River Basin Unit

Reserving area, established by order dated, November 26, 1917 of the Secretary of the Interior, are amended to read as follows:

All of the Reserve Unit lands in addition to those specifically reserved lands by a line commencing on the Unit Boundary at the SE corner Sec. 36, T. 6 S., R. 8 W., W.M., Oregon, thence west to the Pacific Ocean; northerly along the coast line to the mouth of the Columbia River, westerly along the Columbia River to the westerly line between T. 2 and T. 1; east 2 miles; north 12 miles on the 3W corner Sec. 31, T. 2 N., R. 1 E.; east 6 miles; south 6 miles; east 12 miles on the SE corner Sec. 1, T. 1 N., R. 4 E.; north 4 miles; east 3 miles; north 8 miles to the SE corner Sec. 19, T. 2 N., R. 4 E.; east 6 miles; south 3 miles; west 3 miles to the SE corner Sec. 8, T. 2 N., R. 3 E.; south 12 miles; east 22 miles to the Unit boundary on the Columbia River, to a point in Pilot, on the map referred to above.

This Order supersedes Order 1019 of the Secretary of the Interior, dated November 26, 1917. Any part or all of this order may be invalidated upon any entry which shall be found to be in the public interest.

Secretary.

UNITED STATES
DEPARTMENT OF THE INTERIOR
Bureau of Land Management
Washington 25, D. C.

Rescinded by 6 N 6

March 1, 1956

ORDER NO. 610

Subject: Columbia River Master Unit and Appurtenant Marketing Area for Revested Oregon and California Railroad Grant Lands in Oregon.

Pursuant to the authority contained in Section 1 of the Act of August 28, 1937 (50 Stat. 874), and in Order No. 2583, Amendment No. 12, September 17, 1954, of the Secretary of the Interior it is hereby ordered as follows:

1. The boundaries of the Columbia River Master Unit, established by Order 2388, November 29, 1947 of the Secretary of the Interior, are as follows:

Beginning at the NW corner of Sec. 31, T. 5 N., R. 3 W., W.M., Oregon, thence east 12 miles; south 19 miles to the SE corner of Sec. 36, T. 2 N., R. 2 W.; west 6 miles; south 23 miles to the Willamette River at the NE corner of Sec. 36, T.3 S., R. 3 W.; southerly along said river to Yamhill, Polk County line on south boundary of Sec. 4, T. 6 S., R. 3 W.; west 18 miles to the SE corner Sec. 5, T. 6 S., R. 6 W.; thence following the line of legal subdivision; southerly 6 miles; westerly 10 miles to the south $\frac{1}{4}$ corner of Sec. 12 T. 7 S., R. 8 W.; northerly 18 miles to the SE corner Sec. 13, T. 4 S., R. 8 W.; west 4 miles; north 18 miles; east 16 miles to the SE corner Sec. 13, T. 1 S., R. 6 W.; north 3 miles; east 12 miles to the SW corner Sec. 31, T. 1 N., R. 3 W.; north 25 miles to place of beginning, as shown in detail on the map entitled "Map of Western Oregon, showing O. and C. Lands," dated September 18, 1947, on file in the Bureau of Land Management, Department of the Interior, Washington, D. C., and in Portland, Eugene, Salem, Roseburg, Coos Bay and Medford, Oregon.

2. The boundaries of the Columbia River Master Unit Marketing Area, established by Order 2388, November 29, 1947 of the Secretary of the Interior, are amended to read as follows:

All of the Master Unit itself and in addition an area outside thereof bounded by a line commencing on the Unit Boundary at the SW corner Sec. 36, T. 6 S., R. 8 W., W.M., Oregon, thence west 20 miles to the Pacific Ocean; northerly along the coast line to the mouth of the Columbia River, easterly along the Columbia River to the township line between T. 5 and 6 N; east 3 miles; south 18 miles to the SW corner, Sec. 31, T. 3 N., R. 1 E.; east 6 miles; south 6 miles; east 12 miles to the NE corner Sec. 1, T. 1 N., R. 3 E.; south 6 miles; east 3 miles; south 9 miles to the SE corner Sec. 16, T. 2 S., R. 4 E.; west 9 miles; south 9 miles; west 6 miles to the NW corner

Sec. 6, T. 4 S., R. 2 E.; south 12 miles; west 21 miles to the Unit boundary on the Willamette River, as shown in detail on the map referred to above.

This Order supersedes Order 2388 of the Secretary of the Interior, dated November 29, 1947. Any part or all of this order may be hereafter amended if such action shall be found to be in the public interest.

Edward Woolley
Director

1400-451
1214

UNITED STATES
DEPARTMENT OF THE INTERIOR
Bureau of Land Management
Washington 25, D. C.

5.02

April 6, 1956

ORDER NO. 611

Subject: Delegation of Authority

Land Management Incentive Awards Committee

See amendment #1 11/6/63

Pursuant to the authority contained in Section 3(c) of Order No. 2611 of the Secretary of the Interior, dated March 21, 1956, the Land Management Incentive Awards Committee is authorized to grant cash awards not exceeding $500 in any one case.

Edward Woozley
Director

Distribution:

L/1 Mailing List
Washington Staff Officers 1 each
Incentive Awards Committee 10 copies

UNITED STATES
DEPARTMENT OF THE INTERIOR
Bureau of Land Management
Washington, D. C. 20240

1400-451 (6.0d-1)
1214.1

November 6, 1963

BUREAU ORDER No. 611, AMENDMENT No.1

SUBJECT: Delegation of Authority - Land Management Incentive Awards Committee

Order No. 611 dated April 6, 1956 is amended to include the following paragraph:

Pursuant to the authority contained in 375 DM-8.3F (4). The Land Management Incentive Awards Committee is authorized to approve quality increases under the provisions of Section 702 of the Classification Act of 1949, as amended by the Federal Salary Reform Act of 1962, Executive Order No. 11073, and the Civil Service Commission regulations, to bureau employees in grades through GS-14. Recommendations for awards for employees in grades GS-15 and above will be processed by the Land Management Incentive Awards Committee and where appropriate, forwarded to the Interior Incentive Awards Committee for approval as provided in 375 DM-8.3F (2).

J P Reimer
Acting Director

BUREAU ORDER DISTRIBUTION LIST

UNITED STATES
DEPARTMENT OF THE INTERIOR
Bureau of Land Management
Washington, D. C.

May 23, 1956

Order No. 612

Subject: Field Commissioners - Authority as to contests initiated or filed prior to May 1, 1956

1. Pursuant to section 1.5 of Order No. 2583 of the Secretary of the Interior, as amended February 16, 1954 (19 F. R. 1021), authority is hereby delegated to Field Commissioners of the Bureau of Land Management to conduct and preside at hearings on private and Government contests initiated or filed prior to May 1, 1956.

2. Field Commissioners shall conduct such contest proceedings and shall take all necessary actions with respect thereto, in accordance with the applicable laws and regulations. They shall render decisions on contests to the same effect and in the same manner as the managers of land offices heretofore were authorized by section 1.4 of Order No. 2583, and otherwise. Actions of Field Commissioners in such proceedings shall be subject to the right of appeal to the Director to the same extent as similar actions of managers of land offices.

3. Proceedings before Field Commissioners on contests initiated or filed prior to May 1, 1956, shall be conducted in accordance with the regulations specified in Title 43, Code of Federal Regulations, section 221.107, approved March 20, 1956 (21 F. R. 1860).

4. Bureau orders numbered 533, 552, 553, and 599 are hereby revoked.

Director

Distribution

Area Administrators	20 each
State Supervisors	5 "
Washington Staff Officers	1 "

Published
5/30/56
21 FR 3702

1213.3
1710

UNITED STATES
DEPARTMENT OF THE INTERIOR
Bureau of Land Management
Washington, D. C.

June 8, 1956

Order No. 613

Subject: Designation of Coeur d'Alene as District Forestry Office

In view of the increased activities under Public Law 167 and in order to assure prompt action on applications for use and disposal of the resources in that vicinity the Bureau sub-office located at Coeur d'Alene, Idaho is hereby designated as a District Forestry Office. All delegations made to District Foresters by Bureau Order No. 541 may be exercised by the head of this office. The district shall include that part of Idaho north of township 25 North.

Edward Woozley
Director

Distribution

Area Administrators	20
State Supervisors	5 each
Washington Staff Officers	

UNITED STATES
DEPARTMENT OF THE INTERIOR
BUREAU OF LAND MANAGEMENT
WASHINGTON

JUN 12 1956

ORDER NO. 614

Subject: Delegation of authority to transfer, donate, or dispose of excess or surplus real property

Sec. 1 Authority of certain officers to dispose of excess real property. Pursuant to the authority contained in Section 4 (b) of Order No. 2696 of July 17, 1952, and Amendment No. 2, January 19, 1954, of the Secretary of the Interior, the following classes of employees are authorized to transfer, donate or dispose of real property and related personal property excess to the needs of the Bureau of Land Management, as provided in that order and in accordance with the Federal Property and Administrative Services Act of 1949 (63 Stat. 377; 40 U.S.C. Secs. 471-475) as amended and the regulations issued thereunder contained in 44 CFR 1951 Supp., Part 101:

Assistant Director in Charge of Operations

Area Administrators

Chief, Branch of Administrative Services

(b) The Area Administrators may, in writing, redelegate to any qualified employees of their Area the authority granted in this section. Each redelegation shall be published in the Federal Register.

Sec. 2 Revocation. This order revokes Order No. 480, dated October 20, 1952.

Director

BUREAU OF LAND MANAGEMENT FILES

[illegible]

[illegible]

[illegible]

Part 663

UNITED STATES
DEPARTMENT OF THE INTERIOR
BUREAU OF LAND MANAGEMENT
WASHINGTON

also put F.R.

June 12, 1956

ORDER NO. 614

Subject: Delegation of authority to transfer, donate, or dispose of excess or surplus real property

Sec. 1 Authority of certain officers to dispose of excess real property. Pursuant to the authority contained in Section 4 (b) of Order No. 2696 of July 17, 1952, and Amendment No. 2, January 19, 1954, of the Secretary of the Interior, the following classes of employees are authorized to transfer, donate or dispose of real property and related personal property excess to the needs of the Bureau of Land Management, as provided in that order and in accordance with the Federal Property and Administrative Services Act of 1949 (63 Stat. 377; 40 U.S.C. Secs. 471-475) as amended and the regulations issued thereunder contained in 44 CFR 1951 Supp., Part 101:

Assistant Director in Charge of Operations
Area Administrators
Chief, Branch of Administrative Services

(b) The Area Administrators may, in writing, redelegate to any qualified employees of their Area the authority granted in this section. Each redelegation shall be published in the Federal Register.

Sec. 2 Revocation. This order revokes Order No. 488, dated October 20, 1952.

/s/ Edward Woozley

Director

Distribution:

Area Administrators	30 each
State Supervisors	5 "
Eastern States Supervisor	5
Operations Supervisor, Alaska	5
Washington Staff Officers	1 "

REVOKED BY B.O. 679

See Amend No 1 7/2/56

DEPARTMENT OF THE INTERIOR
BUREAU OF LAND MANAGEMENT
WASHINGTON

See copy of order; also part F.R.

Order 615 amend no 1 revokes order 498 and amend no 1 thereto effective 7/15/56

Subject: Delegation of Authority - Contracts and Leases

Sec. 1 Authority of certain offices to [illegible] and leases. (a) Pursuant to the authority contained in [illegible] 52 of Order No. 2509, and Amendment No. 21, November 9, 1954, [illegible] Secretary of the Interior, the following classes of employees [illegible] authorized to enter into contracts for construction [illegible] ing the rental of equipment) or services, irrespective of amount, [illegible] leases of space in real estate as provided in those sections.

Assistant Director in Charge of Operations
Area Administrators
Chief, Branch of Administrative Services

See Amend no 2 10/22/56 Designate footnote

(b) [illegible] at Russellville, Arkansas [illegible] enter into such contracts [illegible] exceed $2,000.

(c) The Area Administrators may, in writing, delegate to any qualified employees of their Area the authority granted in Sec. [illegible] section. Each redelegation shall be published in the Federal Register.

(d) Contracts and leases entered into under this authority must conform with applicable regulations and statutory requirements and are subject to the availability of appropriations.

Same distribution as Order 614

Sec. 2 Negotiation of Contracts with educational institutions. (a) Pursuant to the authority contained in Order No. 2713, of January 13, 1953, the Area Administrators are authorized to negotiate without advertising, pursuant to Section 302 (a) (5) of the Federal Property and Administrative Services Act of 1949, as amended (41 U.S.C., 1946 ed., Supplement V, Sec. 252), contracts for services to be rendered by any university, college, or other educational institution, in connection with programs and activities of the Area.

(b) This authority shall be exercised in accordance with the applicable limitations in the Federal Property and Administrative Services Act of 1949, as amended and in accordance with applicable policies, procedures and controls promulgated by the General Services Administration.

Sec. 3 Revocation. Bureau Order No. 498 and Amendment No. 1 thereof are revoked.

Amend no 1

Revoked by Amd. #4

/s/ Edward Woozley
Director

[illegible] the amount involved is in excess of [illegible], five working days advance notice to the Office of the Secretary [illegible] required in accordance with the Secretary's memorandum of March 2, 1954 and October 17, 1955.

See change in footnote by Amend no 2 10/22/56

See Amend 1 7/2/56

[Order 615]

ASSISTANT DIRECTOR IN CHARGE OF OPERATIONS ET AL.

DELEGATION OF AUTHORITY TO ENTER INTO CONTRACTS AND LEASES

JUNE 12, 1956.

SECTION 1. *Authority of certain offices to enter into contracts and leases.* (a) Pursuant to the authority contained in sections 50 and 52 of Order No. 2509, and Amendment 21, November 9, 1954, of the Secretary of the Interior, the following classes of employees are authorized to enter into contracts for construction, supplies (including the rental of equipment) or services, irrespective of amount,[1] and leases of space in real estate as provided in those sections.

Assistant Director in Charge of Operations.
Area Administrators.
Chief, Branch of Administrative Services.

(b) The Managers of the local offices of the Bureau located at Russellville, Arkansas and New Orleans, Louisiana are authorized to enter into such contracts when the amount in any such contract does not exceed $2,000.

(c) The Area Administrators may, in writing, redelegate to any qualified employees of their Area the authority granted in this section. Each redelegation shall be published in the FEDERAL REGISTER.

(d) Contracts and leases entered into under this authority must conform with applicable regulations and statutory requirements and are subject to the availability of appropriations.

SEC. 2. *Negotiation of contracts with educational institutions.* (a) Pursuant to the authority contained in Order No. 2713, of January 13, 1953, the Area Administrators are authorized to negotiate, without advertising, pursuant to section 302 (c) (5) of the Federal Property and Administrative Services Act of 1949, as amended (41 U. S. C., 1946 ed., supp. V, sec. 252), contracts for services to be rendered by any university, college, or other educational institution, in connection with programs and activities of the area.

(b) This authority shall be exercised in accordance with the applicable limitations in the Federal Property and Administrative Services Act of 1949, as amended and in accordance with applicable policies, procedures and controls prescribed by the General Services Administration.

SEC. 3. *Revocation.* Bureau Order No. 498 and Amendment 1 thereof are revoked.

EDWARD WOOZLEY,
Director.

[F. R. Doc. 56-4772; Filed, June 18, 1956; 8:47 a. m.]

[1] Where the amount involved is in excess of $10,000, five working days advance notice to the Office of the Secretary is required in accordance with the Secretary's memorandum of March 2, 1954 and October 17, 1955.

Sec — Order 615 Amend no 1 revoked Order 498 Amend 1 thereof effective 7/15/56

FEDERAL REGISTER

JUNE 19, 1956

Revoked by 679

Footnote changed per Amendment 1 10/23/56

UNITED STATES
DEPARTMENT OF THE INTERIOR
BUREAU OF LAND MANAGEMENT
WASHINGTON

JUN 12 1956

ORDER NO. 615

Subject: Delegation of Authority - Contracts and Leases

Sec. 1 Authority of certain offices to enter into contracts and leases. (a) Pursuant to the authority contained in Secs. 50 and 52 of Order No. 2509, and Amendment No. 21, November 9, 1954, of the Secretary of the Interior, the following classes of employees are authorized to enter into contracts for construction, supplies (including the rental of equipment) or services, irrespective of amount,[1] and leases of space in real estate as provided in those sections.

Assistant Director In Charge Of Operations

Area Administrators

Chief, Branch of Administrative Services

(b) The Managers of the local offices of the Bureau located at Russellville, Arkansas and New Orleans, Louisiana are authorized to enter into such contracts when the amount in any such contract does not exceed $2,000.

(c) The Area Administrators may, in writing, redelegate to any qualified employees of their Area the authority granted in this section. Each redelegation shall be published in the Federal Register.

(d) Contracts and leases entered into under this authority must conform with applicable regulations and statutory requirements and are subject to the availability of appropriations.

Sec. 2 Negotiation of Contracts with educational institutions.

(a) Pursuant to the authority contained in Order No. 2713, of January 13, 1953, the Area Administrators are authorized to negotiate, without advertising, pursuant to Section 302 (c) (5) of the Federal

---

1/ Where the amount involved is in excess of $10,000, five working days advance notice to the Office of the Secretary is required in accordance with the Secretary's memorandum of March 2, 1954 and October 17, 1955.

BUREAU OF LAND MANAGEMENT FILES

[illegible]

[illegible]

[illegible]

Property and Administrative Services Act of 1949, as amended (41 U.S.C., 1946 ed., Supplement V, Sec. 252), contracts for services to be rendered by any university, college, or other educational institution, in connection with programs and activities of the Area.

(b) This authority shall be exercised in accordance with the applicable limitations in the Federal Property and Administrative Services Act of 1949, as amended and in accordance with applicable policies, procedures and controls prescribed by the General Services Administration.

Sec. 3 Revocation. Bureau Order No. 498 and Amendment No. 1 thereof are revoked.

Edward Woozley
Director

BUREAU OF LAND MANAGEMENT FILES

Revised July 6 79

[illegible]

[illegible]

[illegible]

Revoked by 699

DEPARTMENT OF THE INTERIOR

Bureau of Land Management

[Order No. 615, Amdt. 1]

DELEGATION OF AUTHORITY; CONTRACTS AND LEASES

REVOCATION

JULY 2, 1956.

Section 3 of Order No. 15, dated June 12, 1956, is amended to read:

SEC. 3. *Revocation.* Bureau Order No. 498 and Amendment No. 1 thereof are revoked effective July 15, 1956.

DEPUE FALCK,
Acting Director.

[F. R. Doc. 56-5387; Filed, July 6, 1956; 8:51 a. m.]

FEDERAL REGISTER

JULY 7, 1956

UNITED STATES
DEPARTMENT OF THE INTERIOR
BUREAU OF LAND MANAGEMENT
WASHINGTON

ORDER NO. 615, Amendment No. 2

Subject: Delegation of Authority - Contracts and Leases

The footnote to Bureau Order No. 615, dated June 12, 1956, is amended to read:

1/ Where the amount involved is in excess of $25,000, five working days advance notice to the Office of the Secretary is required in accordance with the Secretary's memoranda of March 2, 1954 and October 17, 1955.

Director

COPY FOR BUREAU OF LAND MANAGEMENT

COPY FOR BUREAU OF LAND MANAGEMENT

Amended by 6-79

11/26 Carpenter
Stebbins 11/27
Vinson 11/27
Jahn 11/27
Thomas 11/27
Neal 11/28

UNITED STATES
DEPARTMENT OF THE INTERIOR
BUREAU OF LAND MANAGEMENT
WASHINGTON 25, D. C.

DEC 3 1956

ORDER NO. 615, Amendment No. 3

Subject: Delegation of Authority - Contracts and Leases

Section 1 of Bureau Order No. 615, dated June 12, 1956, is amended to add subsection (e) to read:

(e) Hearing Examiners appointed to conduct hearings in accordance with the Department's Rules of Practice (43 CFR, Part 221) are authorized to issue purchase orders for reporter's services under any existing Department contract for stenographic reporting not to exceed $2500 in cost for any one order. Hearing Examiners are also authorized to enter into contracts for supplies and equipment when the amount in any such contract does not exceed $500 and the supplies and equipment purchased are non-capitalized in nature.

Director

COPY FOR BUREAU OF LAND MANAGEMENT

[illegible]

[illegible]

[illegible]

Revoked by 679

UNITED STATES
DEPARTMENT OF THE INTERIOR
BUREAU OF LAND MANAGEMENT
WASHINGTON 25, D. C.

December 3, 1956

ORDER NO. 615, Amendment No. 3

Subject: Delegation of Authority - Contracts and Leases

Section 1 of Bureau Order No. 615, dated June 12, 1956, is amended to add subsection (e) to read:

(e) Hearing Examiners appointed to conduct hearings in accordance with the Department's Rules of Practice (43 CFR, Part 221) are authorized to issue purchase orders for reporter's services under any existing Department contract for stenographic reporting not to exceed $1500 in cost for any one order. Hearing Examiners are also authorized to enter into contracts for supplies and equipment when the amount in any such contract does not exceed $500 and the supplies and equipment purchased are non-capitalized in nature.

Director

Distribution:

BLM Order List

File in O.B.

Mr Miller

Revoked by 679

UNITED STATES
DEPARTMENT OF THE INTERIOR
Bureau of Land Management
Washington 25, D. C.

April 16, 1959

ORDER NO. 615, Amendment No. 4

Subject: Delegation of Authority - Contracts and Leases

The footnote to Bureau Order No. 615 dated June 12, 1956 and amended October 22, 1956, is hereby revoked.

/s/ Edward Woozley
Director

Bureau Order Distribution

Rescinded 59 679

DEPARTMENT OF THE INTERIOR
Bureau of Land Management
Washington 25, D.C.

June 16, 1959

ORDER NO. 615, Amendment No. 5

[illegible]

Section 1, subsection (b) of Bureau Order No. 615, dated June 12, 1956 is amended to read:

(b) [illegible] authorized to enter into such contracts when the amount in any such contract does not exceed $2,000.

[illegible]

Revoked by 627

UNITED STATES
DEPARTMENT OF THE INTERIOR
Bureau of Land Management
Washington 25, D.C.

June 14, 1956

ORDER NO. 616

Subject: South Coast Master Unit and Appurtenant Marketing Area for Revested Oregon and California Railroad Reconveyed Coos Bay Wagon Road Grant Lands in Oregon

Pursuant to the authority contained in Section 1 of the Act of August 28, 1937 (50 Stat. 874), and in Order No. 2583, Amendment No. 12, September 17, 1954, of the Secretary of the Interior it is hereby ordered as follows:

1. The boundaries of the South Coast Master Unit established by Order 2385, November 29, 1947 of the Secretary of the Interior, are amended to read as follows:

Beginning at the NE corner Sec. 34, T. 18 S., R. 9 W., W.M., Oregon, thence following lines of legal subdivision as follows: southeasterly 20 miles to NE corner Sec. 17, T. 20 S., R. 7 W.; southerly 14 miles to Elkton on the Umpqua River; southerly 25 miles along said river to the east ¼ corner Sec. 31, T. 23 S., R. 7 W.; westerly 5 miles; southerly 30 miles along divide between Coos and Umpqua Rivers to the NE corner of Sec. 36, T. 27 S., R. 8 W.; westerly 5 miles to the Coos-Douglas County line; southerly 6 miles to NE corner Sec. 1, T. 29 S., R. 9 W.; west 3 miles; south 13 miles to SE corner Sec. 4, T. 31 S., R. 9 W.; southwesterly 13 miles along divide between Coquille and Rogue Rivers to Coos-Curry County line; southwesterly 5 miles along said county line to Sec. 6, T. 33 S., R. 10 W.; southeasterly 12 miles to Josephine-Curry county line in Sec. 12, T. 34 S., R. 10 W.; southwesterly 20 miles to grant limit in Sec. 29, T. 35 S., R. 11 W.; northwesterly 19½ miles to SW corner Sec. 35, T. 33 S., R. 13 W.; northerly 34 miles west 4 miles to the SW corner T. 27 S., R. 13 W., northerly 18 miles to the Pacific Ocean; easterly 18 miles to the SE corner Sec. 36, T. 24 S., R. 11 W.; northerly 18 miles to NE corner T. 22 S., R. 11 W.; east 2 miles; north 8 miles; east 2 miles; north 7¼ miles to the Lane-Douglas County line; northeast along the county line to NE corner of Sec. 12, T. 19 S., R. 10 W.; north ½ mile; west ½ mile; north 1 mile to the hub of Sec. 36, T. 18 S., R. 10 W;

east ½ mile; north ½ mile; east 4 miles to the place of beginning as shown in detail on the map entitled "Map of Western Oregon, showing O&C Lands," on file in the Bureau of Land Management, Department of the Interior, Washington, D. C., Portland, Salem, Eugene, Roseburg, Medford, and Coos Bay, Oregon.

2. The boundaries of the South Coast Master Unit Marketing Area, established by Order 2385, dated November 29, 1947 of the Secretary of the Interior, are amended to read as follows:

All of the Master Unit itself and in addition an area outside thereof founded by a line commencing on the unit boundary at the SE corner Sec. 29, T. 35 S., R. 11 W., W.M., Oregon, thence west 14 miles; south 6 miles; west 6½ miles to the Pacific Ocean at Gold Beach; north along the coastline to township line between T. 18 and 19 S.; east along said township line to the NE corner of Sec. 6, T. 19 S., R. 10 W.; southeasterly along lines of legal subdivisions on the Maple Creek-Sweet Creek divide to the East quarter corner of Sec. 16, T. 19 S., R. 10 W.; east 1¼ miles to the Lane-Douglas County line and the unit boundary as shown in detail on the map referred to above.

This Order supersedes Order 2385 of the Secretary of the Interior, dated November 29, 1947. Any part or all of this Order may be hereafter amended if such action shall be found to be in the public interest.

Director

Revoked by
6 27

DEPARTMENT OF THE INTERIOR

Bureau of Land Management

[Order 818]

SOUTH COAST MASTER UNIT AND APPURTENANT MARKETING AREA FOR REVESTED OREGON AND CALIFORNIA RAILROAD AND RECONVEYED COOS BAY WAGON ROAD GRANT LANDS IN OREGON

JUNE 14, 1956.

Pursuant to the authority contained in section 1 of the act of August 28, 1937 (50 Stat. 874), and in Order No. 2583, Amendment No. 12, September 17, 1954, of the Secretary of the Interior it is hereby ordered as follows:

1. The boundaries of the South Coast Master Unit established by Order 2385, November 29, 1947 of the Secretary of the Interior, are amended to read as follows:

Beginning at the NE corner Sec. 34, T. 18 S., R. 9 W., W. M., Oregon, thence following lines of legal subdivision as follows: southeasterly 20 miles to NE corner Sec. 17, T. 20 S., R. 7 W.; southerly 14 miles to Elkton on the Umpqua River; southerly 25 miles along said river to the east ¼ corner Sec. 31, T. 23 S., R. 7 W.; westerly 5 miles; southerly 30 miles along divide between Coos and Umpqua Rivers to the NE corner of Sec. 36, T. 27 S., R. 8 W.; westerly 5 miles to the Coos-Douglas county line; southerly 6 miles to NE corner Sec. 1, T. 29 S., R. 9 W.; west 3 miles; south 13 miles to SE corner Sec. 4, T. 31 S., R. 9 W.; southwesterly 13 miles along divide between Coquille and Rogue Rivers to Coos-Curry County line; southwesterly 5 miles along said county line to Sec. 6, T. 33 S., R. 10 W.; southeasterly 12 miles to Josephine-Curry county line in Sec. 12, T. 34 S., R. 10 W.; southwesterly 20 miles to grant limit in Sec. 29, T. 35 S., R. 11 W.; northwesterly 19½ miles to SW corner Sec. 35, T. 33 S., R. 13 W.; northerly 34 miles west 4 miles to the SW corner T. 27 S., R. 13 W.; northerly 18 miles to the Pacific Ocean; easterly 18 miles to the SE corner Sec. 36, T. 24 S., R. 11 W.; northerly 18 miles to NE corner T. 22 S., R. 11 W.; east 2 miles; north 8 miles; east 2 miles; north 7¼ miles to the Lane-Douglas County line; northeast along the county line to NE corner of Sec. 12, T. 19 S., R. 10 W.; north ½ mile; west ½ mile; north 1 mile to the hub of Sec. 36, T. 18 S., R. 10 W.; east ½ mile; north ½ mile; east 4 miles to the place of beginning as shown in detail on the map entitled "Map of Western Oregon, showing O & C Lands," on file in the Bureau of Land Management, Department of the Interior, Washington, D. C., Portland, Salem, Eugene, Roseburg, Medford, and Coos Bay, Oregon.

2. The boundaries of the South Coast Master Unit Marketing Area, established by Order 2385, dated November 29, 1947 of the Secretary of the Interior, are amended to read as follows:

All of the Master Unit itself and in addition an area outside thereof founded by a line commencing on the unit boundary at the SE corner Sec. 29, T. 35 S., R. 11 W., W. M., Oregon, thence west 14 miles; south 6 miles; west 6½ miles to the Pacific Ocean at Gold Beach; north along the coastline to township line between T. 18 and 19 S.; east along said township line to the NE corner of Sec. 6, T. 19 S., R. 10 W.; southeasterly along lines of legal subdivisions on the Maple Creek-Sweet Creek divide to the East quarter corner of Sec. 16, T. 19 S., R. 10 W.; east 1¼ miles to the Lane-Douglas County line and the unit boundary as shown in detail on the map referred to above.

This order supersedes Order 2385 of the Secretary of the Interior, dated November 29, 1947. Any part or all of this order may be hereafter amended if such action shall be found to be in the public interest.

EDWARD WOOZLEY,
Director.

[F. R. Doc. 56-4947; Filed, June 22, 1956; 8:45 a. m.]

Revoked by 628

UNITED STATES
DEPARTMENT OF THE INTERIOR
Bureau of Land Management
Washington 25, D. C.

June 14, 1956

ORDER NO. 617

Subject: Siuslaw Master Unit and Appurtenant Marketing Area for Revested Oregon and California Railroad Grant Lands in Oregon

Pursuant to the authority contained in Section 1 of the Act of August 28, 1937 (50 Stat. 874), and in Order No. 2583, Amendment No. 12, September 17, 1954, of the Secretary of the Interior it is hereby ordered as follows:

1. The boundaries of the Siuslaw Master Unit, established by Order 2285, dated December 11, 1946, as amended, of the Secretary of the Interior, are as follows:

Beginning in Sec. 17, T. 15 S., R. 8 W., W.M., Oregon, at the summit of Taylor Butte, thence along the lines of legal subdivisions, southwesterly, 7½ miles, around the headwaters of Deadwood Creek; southerly, 9½ miles, to the Siuslaw River; southeasterly, 8½ miles, around the headwaters of the drainage into the Siuslaw River, to the line between Lane and Douglas Counties, sections, 1, 2, 11, and 12, T. 19 S., R. 9 W.; southeasterly, 33½ miles, around the headwaters of the drainage into the Siuslaw, on and adjacent to the boundary line between Lane and Douglas Counties to the ¼ section corner between sections 26 and 35, T. 21 S., R. 4 W.; northeasterly and westerly, 15 miles, around the headwaters of the drainage into the Siuslaw River, northerly, 24 miles around the headwaters of Wolf Creek, Noti Creek, and Long Creek to the line between Lane and Benton Counties in Sec. 12, T. 15 S., R. 6 W., W.M.; westerly from the east line of said Sec. 12, along the Lane-Benton County line, 7½ miles, to the center line of Sec. 11, T. 15 S., R. 7 W., W.M.; thence along legal subdivisions north, ¼ mile, west, 1½ miles; north, ¼ mile, west, 1¼ miles; south, ¼ mile; west, ½ mile; south, ¼ mile; west, ½ mile; south, approximately ¼ mile; west, ½ mile; south, approximately ¼ mile; thence along logging setting boundaries, southerly approximately 3/4 mile; southeasterly, approximately ½ mile; southwesterly, approximately 2 miles; southeasterly, approximately 3/4 mile to the east section line of Sec. 25, T. 15 S., R. 8 W., W.M.; thence along legal subdivisions, south approximately 3/4 mile to the northeast corner of the Sec. 36,

T. 15 S., R. 8 W.; west, ½ mile; south, 3/4 mile; west, 3/4 mile; northerly, ½ mile; west, 3/4 mile; north, ¼ mile; west, 1 mile to the northwest corner of Sec. 34, T. 15 S., R. 8 W., W.M.; north, 1½ miles; west, 3/4 mile; north, ¼ mile; west, ¼ mile; north 3/4 mile; west to the summit of Taylor Butte, the place of beginning; all as shown in more detail on the map entitled "Map of Western Oregon, showing O&C Lands," on file in the Bureau of Land Management, Department of the Interior, Washington, D. C., and Portland, Eugene, Salem, Roseburg, Medford, and Coos Bay, Oregon.

2. The boundaries of the Siuslaw Master Unit Marketing Area, established by Order 2285, dated December 11, 1946, as amended, of the Secretary of the Interior, are amended to read as follows:

Commencing on the northeast corner of the Siuslaw Master Unit, thence easterly along the boundary between Benton and Lane Counties to the Willamette River, thence south following the river to the boundary between Linn and Lane Counties; east to the range line between R 1 W and R 2 W. Willamette, Meridian, thence south to the township line between T 21 S and T 22 S, thence west to the south quarter corner of Section 35 in T 21 S. R. 4 W; thence north 1 mile to the Master Unit boundary, thence westerly along the Master Unit boundary to the NW corner of Sec. 35, T. 18 S., R. 9 W.; west to the NE corner of Sec. 36, T. 18 S., R. 10 W.; ½ mile south; ½ mile west to hub of Sec. 36; south 1 mile to hub of Sec. 1, T. 19 S.; R. 10 W.; east ½ mile; south ½ mile to NE corner of Sec. 12 and the Lane-Douglas County line; southwesterly along the county line to NW corner of the NE¼SW¼ of Sec. 14; west 1¼ miles to the east quarter corner of Sec. 16; northwesterly along lines of legal subdivisions on the Maple Creek-Sweet Creek divide to the NE corner of Sec. 6, T. 19 S., R. 10 W.; west along the township line between T. 18 and 19 S to the Pacific Ocean; north along the coastline to the township line between T. 17 and 18 S.; east approximately 10 miles to NE corner of T. 18 S., R. 11 W.; north 4 miles; east 6 miles; north 2 miles; east 1 mile; north 2½ miles to the unit boundary; northeasterly along the northerly boundary of the unit to the point of beginning, all as shown in more detail on the map referred to above.

This Order supersedes Order 2285, as amended, of the Secretary of the Interior dated December 11, 1946. Any part or all of this Order may be hereafter amended if such action shall be found to be in the public interest.

Director

101527

Revoked by 628

[Order 617]

SIUSLAW MASTER UNIT AND APPURTENANT MARKETING AREA FOR REVESTED OREGON AND CALIFORNIA RAILROAD GRANT LANDS IN OREGON

JUNE 14, 1956.

Pursuant to the authority contained in section 1 of the act of August 28, 1937 (50 Stat. 874), and in Order No. 2583, Amendment No. 12, September 17, 1954, of the Secretary of the Interior it is hereby ordered as follows:

1. The boundaries of the Siuslaw Master Unit, established by Order 2285, dated December 11, 1946, as amended, of the Secretary of the Interior, are as follows:

Beginning in Sec. 17, T. 15 S., R. 8 W., W. M., Oregon, at the summit of Taylor Butte, thence along the lines of legal subdivisions, southwesterly, 7½ miles, around the headwaters of Deadwood Creek; southerly, 9½ miles, to the Siuslaw River; southeasterly, 8½ miles, around the headwaters of the drainage into the Siuslaw River, to the line between Lane and Douglas counties, sections 1, 2, 11, and 12, T. 19 S., R. 9 W.; southeasterly, 33½ miles, around the headwaters of the drainage into the Siuslaw, on and adjacent to the boundary line between Lane and Douglas Counties to the ¼ section corner between sections 26 and 35, T. 21 S., R. 4 W.; northeasterly and westerly, 15 miles, around the headwaters of the drainage into the Siuslaw River, northerly, 24 miles, around the headwaters of Wolf Creek, Noti Creek, and Long Creek to the line between Lane and Benton counties in Sec. 12, T. 15 S., R. 6 W., W. M.; westerly from the east line of said Sec. 12, along the Lane-Benton County line, 7½ miles, to the center line of Sec. 11, T. 15 S., R. 7 W., W. M.; thence along legal subdivisions north, ¼ mile, west, 1½ miles; north, ¼ mile; west, 1¼ miles; south, ¼ mile; west, ½ mile; south, ¼ mile; west, ½ mile; south, approximately ¼ mile; west, ½ mile; south, approximately ¼ mile; thence along logging setting boundaries, southerly approximately ¾ mile; southeasterly, approximately ½ mile; southwesterly, approximately 2 miles; southeasterly, approximately ¾ mile to the east section line of Sec. 25, T. 15 S., R. 8 W., W. M.; thence along legal subdivisions, south approximately ¾ mile to the northeast corner of the Sec. 36, T. 15 S., R. 8 W.; west, ½ mile; south, ¾ mile; west, ¾ mile; northerly, ½ mile; west, ¾ mile; north, ¼ mile; west, 1 mile to the northwest corner of Sec. 34, T. 15 S., R. 8 W., W. M.; north, 1½ miles; west, ¾ mile; north, ¼ mile; west, ¼ mile; north ¾ mile; west to the summit of Taylor Butte, the place of beginning; all as shown in more detail on the map entitled "Map of Western Oregon, showing O & C Lands," on file in the Bureau of Land Management, Department of the Interior, Washington, D. C., and Portland, Eugene, Salem, Roseburg, Medford, and Coos Bay, Oregon.

2. The boundaries of the Siuslaw Master Unit Marketing Area established by Order 2285, dated December 11, 1946, as amended, of the Secretary of the Interior, are amended to read as follows:

Commencing on the northeast corner of the Siuslaw Master Unit, thence easterly along the boundary between Benton and Lane Counties to the Willamette River, thence south following the river to the boundary between Linn and Lane Counties; east to the range line between R. 1 W. and R. 2 W. Willamette, Meridian, thence south to the township line between T. 21 S. and T. 22 S., thence west to the south quarter corner of Section 35 in T. 21 S. R. 4 W.; thence north 1 mile to the Master Unit boundary, thence westerly along the Master Unit boundary to the NW corner of Sec. 35, T. 18 S., R. 9 W.; west to the NE corner of Sec. 36, T. 18 S., R. 10 W.; ½ mile south; ½ mile west to hub of Sec. 36; south 1 mile to hub of Sec. 1, T. 19 S.; R. 10 W.; east ½ mile; south ½ mile to NE corner of Sec. 12 and the Lane-Douglas County line; southwesterly along the county line to NW corner of the NE¼ SW¼ of Sec. 14; west 1¼ miles to the east quarter corner of Sec. 16; northwesterly along lines of legal subdivisions on the Maple Creek-Sweet Creek divide to the NE corner of Sec. 6, T. 19 S., R. 10 W.; west along the township line between T. 18 and 19 S. to the Pacific Ocean; north along the coastline to the township line between T. 17 and 18 S.; east approximately 10 miles to NE corner of T. 18 S., R. 11 W.; north 4 miles; east 6 miles; north 2 miles; east 1 mile; north 2½ miles to the unit boundary; northeasterly along the northerly boundary of the unit to the point of beginning, all as shown in more detail on the map referred to above.

This order supersedes Order 2285, as amended, of the Secretary of the Interior dated December 11, 1946. Any part or all of this order may be hereafter amended if such action shall be found to be in the public interest.

EDWARD WOOZLEY,
Director.

[F. R. Doc. 56-4948; Filed, June 22, 1956; 8:45 a. m.]

FEDERAL REGISTER

JUNE 23, 1956

UNITED STATES
DEPARTMENT OF THE INTERIOR
Bureau of Land Management
Washington, D. C.

August 10, 1956

Order No. 618

Subject: Posting of Canceled or Relinquished Mineral Leases and Permits

Effective immediately all postings of relinquished or canceled mineral leases and permits in the tract books and other Land Office records will be made at a time when the Land Office is not open to the public.

State Supervisors may establish similiar procedures for other types of cases in offices where such procedures appear advisable.

This procedure is necessary to insure that all parties have equal opportunity to file timely applications for the lands involved in the relinquished or canceled permits and leases.

Ken Thomas
Acting Director

Distribution

Area Administrators	20 ea.
State Supervisors	5 ea.
Land Office Managers	2 ea.
Washington Staff Officers	2 ea.

UNITED STATES
DEPARTMENT OF THE INTERIOR
Bureau of Land Management
Washington, D. C.

Order No. 619 August 15, 1956

Subject: Authorization of an allowance for officers and employees of the Government who are notaries public

Budget and Finance Letter, No. 136 and Public Law 681, 84th Congress have been previously distributed to all offices.

Employees who are required to be notaries public in the performance of their official duties may be reimbursed an amount not to exceed the expense incurred by them in order to obtain their commission from and after January 1, 1955. These expenses shall include the cost of the seal and necessary rubber stamps, etc., obtained after that date. The seal should be the simplest one consistent with the use required.

Employees claiming reimbursement for the expense of obtaining their commission shall submit to their accounting office for payment a Standard Form No. 1164-Rev., Claim for Reimbursement For Expenditures on Official Business, itemizing the amount claimed under "Miscellaneous Expenditures".

If the commission was obtained after January 1, 1955 and prior to the effective date of this order and original receipts showing the amounts paid are not available, the employee must show the amounts paid and to whom paid and must state on the form or on an attachment thereto, that original receipts were not available. The voucher must be administratively approved by the Area Administrator or Executive Officer as having been obtained in the interest of the Government.

If the commission is to be obtained after the effective date of this order, obtaining the commission must first be authorized by the Executive Officer, Area Administrator or Area Administrative Officer and the claim for reimbursement must be supported by proper receipts evidencing payment.

/s/ Earl J. Thomas

Acting Director

Distribution:
Branch of Budget and Finance - 15
Area Administrators - 20 each
Alaska Operations Supervisor - 5
Eastern States Supervisor - 5
State Supervisors - 5 each
Washington Staff Officers - 2

1400-591

UNITED STATES
DEPARTMENT OF THE INTERIOR
Bureau of Land Management
Washington, D. C.

March 19, 1963

Order No. 619, Amendment No. 1

Subject: Authorization of an allowance for officers and employees of the Government who are notaries public

The fifth paragraph of Bureau Order No. 619, dated August 15, 1956, is amended to read as follows:

> Authority for obtaining the commission at Government expense must first be granted by the Assistant Director, Administration, the Field Administrative Officer, or the State Director, and the claim for reimbursement must be supported by proper receipts evidencing payment.

Karl S. Landstrom
Director

DISTRIBUTION:

Bureau Order List

UNITED STATES
DEPARTMENT OF THE INTERIOR
Bureau of Land Management
Washington, D. C.

August 22, 1956

Order No. 620

Subject: Fire Protection and Assistance

Sec. 1 Pursuant to the authority contained in Section 2 of Order No. 2815 of the Secretary of the Interior, the Area Administrators are authorized to exercise the authority vested in the Secretary of the Interior pursuant to the act of May 27, 1955 (69 Stat. 66; 42 U.S.C., 1952 ed., Supp. III, sec. 1856), with respect to reciprocal agreements with fire organizations and the rendering of emergency assistance in extinguishing fires or preserving life and property from fire, subject to the regulations prescribed by the Secretary of the Interior.

Sec. 2 The Area Administrators may, in writing redelegate to any qualified employees of their respective areas the authority granted in section 1 of this order.

Sec. 3 Any funds received for fire protection rendered pursuant to the above act shall be deposited to Miscellaneous Receipts.

/s/ Earl J. Thomas

Acting Director

Distribution

Area Administrators	25 each
State Supervisors	5 each
Washington Staff Officers	5 each

UNITED STATES
DEPARTMENT OF THE INTERIOR
Bureau of Land Management
Washington 25, D. C.

5.02

September 21, 1956

ORDER NO. 621

Subject: Distribution of carbon copies on inter-bureau correspondence

Effective immediately the distribution of copies of all correspondence between the various offices of the Bureau will be noted on the original of the correspondence as well as on all carbon copies.

/s/ Edward Woozley

Director

Distribution:

Bureau Order List

1213.3
1710

5.02

UNITED STATES
DEPARTMENT OF THE INTERIOR
Bureau of Land Management
Washington 25, D. C.

October 26, 1956

ORDER NO. 622

Subject: Establishment of District Forestry Office at Missoula, Montana

Because of the accelerated forestry and other land management programs in northwestern Montana a District Forestry Office is hereby established at Missoula, Montana.

The area in the Forestry District will include public lands in the Counties of Lincoln, Flathead, Sanders, Lake, Mineral, Missoula, Powell, Lewis and Clark, Ravalli, and Granite.

/s/ Edward Woozley
Director

Distribution:

Bureau Order List

1213.3
1710

UNITED STATES
DEPARTMENT OF THE INTERIOR
Bureau of Land Management
Washington, D. C.

November 5, 1956

Order No. 623

Subject: Establishment of District Office at Casper, Wyoming

A district grazing office is hereby established at Casper, Wyoming. This office will administer section 15 grazing leases formerly handled from the Lander Office and such other matters as may be designated by the State Supervisor.

The area of responsibility for the office shall be as follows:

Wyoming

Natrona County

All except the lands in Wyoming Grazing District No. 2 and lands within the Medicine Bow National Forest.

Converse County

All, excepting that portion within the boundary of the Medicine Bow National Forest.

Niobrara County

All.

Platte County

All, excepting that portion of the county within the exterior boundary of the Medicine Bow National Forest.

Goshen County

All.

Weston County

All, excepting that portion of the county within the exterior boundary of the Black Hills National Forest.

Campbell County

All.

Crook County

All, excepting that portion of the county within the exterior boundaries of the Black Hills National Forest.

Sheridan County

All, excepting that portion of the county included within the exterior boundary of the Bighorn National Forest.

Johnson County

All, excepting that portion of the county included within the exterior boundary of the Bighorn National Forest.

Nebraska and Kansas

All the public lands in the States of Nebraska and Kansas.

Director

Distribution:

BLM Order List

UNITED STATES
DEPARTMENT OF THE INTERIOR
Bureau of Land Management
Washington, D. C.

Recd 695

See Amend No. 1

January 25, 1957

Order No. 624

Subject: Travel by privately-owned automobile

Order No. 599, dated August 17, 1955, and amendments thereto, are revoked in their entirety and are superseded by this order.

Having been administratively determined to be to the advantage of the Government, the following, as well as other applicable rules, will be observed in authorizing the use of privately-owned automobiles:

A. Mileage

(1) To pay a flat rate of seven cents per mile for the use of a privately-owned automobile except in transfer of duty station or home leave, the latter pertaining to Area 4 (Alaska).

(2) To pay a rate of ten cents per mile in connection with a transfer of duty station. If the employee himself does not travel in the automobile, this condition must be specifically authorized in the travel orders; otherwise, only an actual cost basis of transportation reimbursement, not in excess of common carrier costs, is allowable.

(3) To pay a rate of ten cents per mile for the use of privately-owned automobile when returning the employee from his station in Alaska to his home station in the United States for purposes of home leave and return to Alaska, if otherwise allowable, subject to the following restrictions:

a. The amount to be reimbursed to the employee may not exceed the cost which would have been incurred for the transportation of the employee and his family and the employee's per diem had the travel been performed by common carrier.

b. In those cases involving travel of the family separate from the travel of the employee, the

total cost may not exceed the total cost which would have been incurred if all members of the family had traveled by common carrier.

c. If the employee himself does not travel in the automobile, this condition must be specifically authorized in the travel order; otherwise, only an actual cost basis of transportation reimbursement, not in excess of common carrier costs, is allowable.

d. Annual leave shall be charged for any excess travel time used in traveling by privately-owned automobile over that which would have been incurred had the employee traveled by airplane to and from Seattle and rail transportation thereafter to and from the home leave station.

(4) To pay a rate of ten cents per mile for the round trip plus any necessary parking fee when using a privately-owned automobile in lieu of taxicab or limousine from and to traveler's residence to common carrier terminal when commencing or ending official travel subject to the following restriction:

a) The amount to be reimbursed to the traveler may not exceed the cost of the usual fare, including allowable tip, which would have been incurred had the traveler used a taxicab or limousine.

B. Per Diem Allowance

Per diem in lieu of subsistence allowed for official travel time between Washington, D. C. and points in Areas 1, 2 and 3 will be limited to common carrier time, unless an administrative determination of advantage to the Government is made to allow per diem for actual travel time.

On transfer of duty station and for travel between all other points actual travel time for purposes of per diem shall be allowed unless there is a delay which is not satisfactorily explained.

C. Leave

(1) In transfer of duty station, actual travel time shall be allowed with no charge to annual leave unless there is a delay which is not satisfactorily explained.

(2) For all other travel by privately-owned vehicle, unless it is administratively determined otherwise, annual leave shall be charged for time in excess of common carrier time; Saturdays, Sundays and holidays excluded:

(a) between points in Areas 1, 2 and 3 and Washington, D. C. and

(b) for delays between other points which are not satisfactorily explained.

This order is effective this date.

Director

[illegible]

[illegible]

In Reply Refer to:
5.02
5.04e:B

Revoked
See Bur Ord. 669

UNITED STATES
DEPARTMENT OF THE INTERIOR
Bureau of Land Management
WASHINGTON 25, D. C.

FEB 6, 1957

ORDER NO. 625

Subject: Appraisal Review Boards

Sec. 1. Headquarters Appraisal Review Board.

a. An Appraisal Review Board is established in the Division of Technical Programs to advise and assist the Director on matters pertaining to the appraisal of lands and resources.

b. The Board will consist of the following:

Harold R. Hochmuth, Lands Staff Officer, Chairman
William L. Shafer, Minerals Officer, Member
Gerard F. Horne, Forestry Officer, Member
John A. Keith, Range Officer, Member

c. The Board will meet at the call of the Chairman in accordance with instructions of the Assistant Director, Division of Technical Programs.

d. The Board will:

(1) Cooperate with the Office of the Secretary in development of appraisal policies, general standards, and basic procedures.

(2) Review periodically Bureau appraisal manual material and appraisal practices.

(3) Advise and assist in staffing, recruitment, training and inspection of specialized personnel assigned to the appraisal function at Area and State levels.

(4) Review appraisal situation and problems which are referred to Washington by Area Appraisal Review Boards.

(5) Facilitate cooperation with other Bureaus and agencies engaged in appraisals, and with professional appraisers organizations.

(6) Perform other functions as required.

Sec. 2. Area Appraisal Review Boards.

a. An Appraisal Review Board is established in each Area Office to advise and assist the Area Administrator on matters pertaining to the appraisal of lands and resources.

b. The Board will consist of personnel to be designated by the Area Administrator.

c. The Board will meet at the call of the Chairman in accordance with instructions of the Area Administrator.

d. The Board will:

(1) Cooperate with the Office of the Director in development of appraisal policies, standards, and procedures.

(2) Review periodically Area appraisal instructions and processes.

(3) Advise and assist in staffing, recruitment, training and inspection of specialized personnel assigned to the appraisal function at the State level.

(4) Review appraisal situation and problems which are referred to the Area Office by State Appraisal Review Boards.

(5) Facilitate cooperation with other Bureaus and agencies engaged in appraisals, and with professional appraisers organizations.

(6) Perform other functions as required.

Sec. 3. State Appraisal Review Boards.

a. An Appraisal Review Board is established in each State Office and in the Operations Office in Alaska to advise and assist the State Supervisor or Operations Supervisor on matters pertaining to the appraisal of lands and resources.

b. The Board will consist of members to be designated by the State Supervisor, who will serve as Chairman, ex-officio.

c. The Board will meet at the call of the Chairman.

d. The Board will:

(1) Cooperate with the Office of the Director and the Area Administrator in development of appraisal policies, standards, and procedures.

(2) Review periodically State appraisal instructions and processes.

(3) Advise and assist in staffing, recruitment, training, and inspection of specialized personnel assigned to the appraisal function in the State.

(4) Review appraisal situation and problems within the State.

(5) Facilitate cooperation with other Bureaus and agencies engaged in appraisals, and with professional appraisers organizations.

(6) Perform other functions as required.

Sec. 4. Reports. Each Appraisal Review Board will submit on or about June 30 each year through channels a report of its activities for the preceding fiscal year.

Acting Director

Distribution
Bureau Order Distribution List

3045

SS B

UNITED STATES
DEPARTMENT OF THE INTERIOR
Bureau of Land Management
Washington 25, D. C.

ORDER NO. 626 March 29, 1957

Subject: Columbia River Master Unit for Revested Oregon and California Railroad Grant lands in Oregon

Pursuant to the authority contained in Section 1 of the Act of August 28, 1937 (50 Stat. 874), and on Order No. 2583, Amendment No. 12, September 17, 1954, of the Secretary of the Interior it is hereby ordered as follows:

1. The boundaries of the Columbia River Master Unit established by Order No. 2388, November 29, 1947, are redefined to read as follows:

> Beginning at the NW corner of Sec. 31, T. 5 N., R. 3 W., W.M., Oregon, thence east 12 miles; south 19 miles to the SE corner of Sec. 36, T. 2 N., R. 2 W.; west 6 miles; south 23 miles to the Willamette River at the NE corner of Sec. 36, T. 3 S., R. 3 W.; southerly along said river to Yamhill, Polk County line on south boundary of Sec. 4, T. 6 S., R. 3 W.; west 18 miles to the SE corner Sec. 5, T. 6 S., R. 6 W.; thence following line of legal subdivision; southerly 6 miles; westerly 10 miles to the south ¼ corner of Sec. 12, T. 7 S., R. 8 W.; northerly 18 miles to the SE corner Sec. 13, T. 4 S., R. 8 W., west 4 miles; north 18 miles; east 16 miles to the SE corner Sec. 13, T. 1 S., R. 6 W.; north 3 miles; east 12 miles to the SW corner Sec. 31, T. 1 N., R. 3 W.; north 25 miles to place of beginning, as shown in detail on the map entitled "Map of Western Oregon, showing O. & C. Lands," dated September 18, 1947, on file in the Bureau of Land Management, Department of the Interior, Washington, D. C., and in Portland, Eugene, Salem, Roseburg, Coos Bay, and Medford, Oregon.

2. This order supersedes Order No. 610 of the Director, Bureau of Land Management, dated March 1, 1956.

/s/ Edward Woozley
Director

Bureau Order distribution list

UNITED STATES
DEPARTMENT OF THE INTERIOR
Bureau of Land Management
Washington 25, D. C.

MAR 29 1957

ORDER NO. 626

Subject: Columbia River Master Unit for Revested Oregon and California Railroad Grant lands in Oregon

Pursuant to the authority contained in Section 1 of the Act of August 28, 1937 (50 Stat. 874), and on Order No. 2583, Amendment No. 12, September 17, 1954, of the Secretary of the Interior it is hereby ordered as follows:

1. The boundaries of the Columbia River Master Unit established by Order No. 2388, November 29, 1947, are redefined to read as follows:

> Beginning at the NW corner of Sec. 31, T. 5 N., R. 3 W., W.M., Oregon, thence east 12 miles; south 19 miles to the SE corner of Sec. 36, T. 2 N., R. 2 W.; west 6 miles; south 23 miles to the Willamette River at the NE corner of Sec. 36, T. 3 S., R. 3 W.; southerly along said river to Yamhill, Polk County line on south boundary of Sec. 4, T. 6 S., R. 3 W.; west 18 miles to the SE corner Sec. 5, T. 6 S., R. 6 W.; thence following line of legal subdivision; southerly 6 miles; westerly 10 miles to the south ¼ corner of Sec. 12, T. 7 S., R. 8 W.; northerly 18 miles to the SE corner Sec. 13, T. 4 S., R. 8 W.; west 4 miles; north 18 miles; east 16 miles to the SE corner Sec. 13, T. 1 S., R. 6 W.; north 3 miles; east 12 miles to the SW corner Sec. 31, T. 1 N., R. 3 W.; north 25 miles to place of beginning, as shown in detail on the map entitled "Map of Western Oregon, showing O. & C. Lands," dated September 18, 1947, on file in the Bureau of Land Management, Department of the Interior, Washington, D. C., and in Portland, Eugene, Salem, Roseburg, Coos Bay, and Medford, Oregon.

2. This order supersedes Order No. 610 of the Director, Bureau of Land Management, dated March 1, 1956.

Director

UNITED STATES
DEPARTMENT OF THE INTERIOR
Bureau of Land Management
Washington 25, D. C.

MAR 29 1957

ORDER NO. 626

Subject: Columbia River Master Unit for Revested Oregon and California Railroad Grant lands in Oregon

Pursuant to the authority contained in Section 1 of the Act of August 28, 1937 (50 Stat. 874), and on Order No. 2583, Amendment No. 12, September 17, 1954, of the Secretary of the Interior it is hereby ordered as follows:

1. The boundaries of the Columbia River Master Unit established by Order No. 2388, November 29, 1947, are redefined to read as follows:

> Beginning at the NW corner of Sec. 31, T. 5 N., R. 3 W., W.M., Oregon, thence east 12 miles; south 19 miles to the SE corner of Sec. 36, T. 2 N., R. 2 W.; west 6 miles; south 23 miles to the Willamette River at the NE corner of Sec. 36, T. 3 S., R. 3 W.; southerly along said river to Yamhill, Polk County line on south boundary of Sec. 4, T. 6 S., R. 3 W.; west 18 miles to the SE corner Sec. 5, T. 6 S., R. 6 W.; thence following line of legal subdivision; southerly 6 miles; westerly 10 miles to the south ¼ corner of Sec. 12, T. 7 S., R. 8 W.; northerly 18 miles to the SE corner Sec. 13, T. 4 S., R. 8 W.; west 4 miles; north 18 miles; east 16 miles to the SE corner Sec. 13, T. 1 S., R. 6 W.; north 3 miles; east 12 miles to the SW corner Sec. 31, T. 1 N., R. 3 W.; north 25 miles to place of beginning, as shown in detail on the map entitled "Map of Western Oregon, showing O. & C. Lands," dated September 18, 1947, on file in the Bureau of Land Management, Department of the Interior, Washington, D. C., and in Portland, Eugene, Salem, Roseburg, Coos Bay, and Medford, Oregon.

[illegible]

[illegible]

[illegible]

2. This order supersedes Order No. 610 of the Director, Bureau of Land Management, dated March 1, 1956.

Director

UNITED STATES
DEPARTMENT OF THE INTERIOR
Bureau of Land Management
Washington 25, D. C.

ORDER NO. 627 March 29, 1957

Subject: South Coast Master Unit for Revested Oregon and California Railroad and Reconveyed Coos Bay Wagon Road Grant lands in Oregon

Pursuant to the authority contained in Section 1 of the Act of August 28, 1937 (50 Stat. 874), and in Order No. 2583, Amendment No. 12, September 17, 1954, of the Secretary of the Interior, it is hereby ordered as follows:

1. The boundaries of the South Coast Master Unit established by Order 2385, November 29, 1947 of the Secretary of the Interior, are redefined to read as follows:

> Beginning at the NE corner Sec. 34, T. 18 S., R. 9 W., W.M., Oregon, thence following lines of legal subdivision as follows: southeasterly 20 miles to NE corner Sec. 17, T. 20 S., R. 7 W.; southerly 14 miles to Elkton on the Umpqua River; southerly 25 miles along said river to the east ¼ corner Sec. 31, T. 23 S., R. 7 W.; westerly 5 miles; southerly 30 miles along divide between Coos and Umpqua Rivers to the NE corner of Sec. 36, T. 27 S., R. 8 W.; westerly 5 miles to the Coos-Douglas county line; southerly 6 miles to NE corner Sec. 1, T. 29 S., R. 9 W.; west 3 miles; south 13 miles to SE corner Sec. 4, T. 31 S., R. 9 W.; southwesterly 13 miles along divide between Coquille and Rogue Rivers to Coos-Curry County lines; southwesterly 5 miles along said county line to Sec. 6, T. 33 S., R. 10 W.; southeasterly 12 miles to Josephine-Curry county line in Sec. 12, T. 34 S., R. 10 W.; southwesterly 20 miles to grant limit in Sec. 29, T. 35 S., R. 11 W.; northwesterly 19½ miles to SW corner Sec. 35, T. 33 S., R. 13 W.; northerly 34 miles; west 4 miles to the SW corner T. 27 S., R. 13 W., northerly 18 miles to the Pacific Ocean; easterly 18 miles to the SE corner Sec. 36, T. 24 S., R. 11 W.; northerly 18 miles to NE corner T. 22 S., R. 11 W.; east 2 miles; north 8 miles; east 2 miles; north 7 miles; east 2 miles; north 4 miles; east

4 miles to the place of beginning, as shown in detail on the map entitled "Map of Western Oregon, showing O. & C. Lands, " dated September 18, 1947, on file in the Bureau of Land Management, Department of the Interior, Washington, D. C., Portland, Salem, Eugene, Roseburg, Medford, and Coos Bay, Oregon.

2. This order supersedes Order No. 616 of the Director, Bureau of Land Management, dated June 14, 1956.

/s/ Edward Woozley
Director

Bureau Order distribution list

UNITED STATES
DEPARTMENT OF THE INTERIOR
Bureau of Land Management
Washington 25, D. C.

March 29, 1957

ORDER NO. 627

Subject: South Coast Master Unit for Revested Oregon and California Railroad and Reconveyed Coos Bay Wagon Road Grant lands in Oregon

Pursuant to the authority contained in Section 1 of the Act of August 28, 1937 (50 Stat. 874), and in Order No. 2583, Amendment No. 12, September 17, 1954, of the Secretary of the Interior, it is hereby ordered as follows:

1. The boundaries of the South Coast Master Unit established by Order 2385, November 29, 1947 of the Secretary of the Interior, are redefined to read as follows:

> Beginning at the NE corner Sec. 34, T. 18 S., R. 9 W., W.M., Oregon, thence following lines of legal subdivision as follows: southeasterly 20 miles to NE corner Sec. 17, T. 20 S., R. 7 W.; southerly 14 miles to Elkton on the Umpqua River; southerly 25 miles along said river to the east ¼ corner Sec. 31, T. 23 S., R. 7 W.; westerly 5 miles; southerly 30 miles along divide between Coos and Umpqua Rivers to the NE corner of Sec. 36, T. 27 S., R. 8 W.; westerly 5 miles to the Coos-Douglas county line; southerly 6 miles to NE corner Sec. 1, T. 29 S., R. 9 W.; west 3 miles; south 13 miles to SE corner Sec. 4, T. 31 S., R. 9 W.; southwesterly 13 miles along divide between Coquille and Rogue Rivers to Coos-Curry County lines; south[illegible] westerly [illegible] miles along said county line to Sec. 6, T. 33 S., R. 10 W.; southeasterly 12 miles to Josephine-Curry county line in Sec. 12, T. 34 S., R. 10 W.; southwesterly 20 miles to grant limit in Sec. 29, T. 35 S., R. 11 W.; northwesterly 19½ miles to SW corner Sec. 35, T. 33 S., R. 13 W.; northerly 34 miles; west 4 miles to the SW corner T. 27 S., R. 13 W., northerly 18 miles to the Pacific Ocean; easterly

18 miles to the SE corner Sec. 36, T. 24 S., R. 11 W.; northerly 18 miles to NE corner T. 22 S., R. 11 W.; east 2 miles; north 8 miles; east 2 miles; north 7 miles; east 2 miles; north 4 miles; east 4 miles to the place of beginning, as shown in detail on the map entitled "Map of Western Oregon, showing O. & C. Lands," dated September 18, 1947, on file in the Bureau of Land Management, Department of the Interior, Washington, D. C., Portland, Salem, Eugene, Roseburg, Medford, and Coos Bay, Oregon.

2. This order supersedes Order No. 616 of the Director, Bureau of Land Management, dated June 14, 1956.

Director

UNITED STATES
DEPARTMENT OF THE INTERIOR
Bureau of Land Management
Washington 25, D. C.

ORDER NO. 628 March 29, 1957

Subject: Siuslaw Master Unit for Revested Oregon and California Railroad Grant Lands in Oregon

Pursuant to the authority contained in Section 1 of the Act of August 28, 1937 (50 Stat. 874) and in Order No. 2583, Amendment No. 12, September 17, 1954, of the Secretary of the Interior, it is hereby ordered as follows:

1. The boundaries of the Siuslaw Master Unit, established by Order No. 2285, dated December 11, 1946, as amended, are redefined to read as follows:

> Beginning in Sec. 17, T. 15 S., R. 8 W., W.M., Oregon, at the summit of Taylor Butte, thence along the lines of legal subdivisions, southwesterly, 7½ miles, around the headwaters of Deadwood Creek; southerly 9½ miles, to the Siuslaw River; southeasterly, 8½ miles, around the headwaters of the drainage into the Siuslaw River, to the line between Lane and Douglas counties. sections 1, 2, 11 and 12, T. 19 S., R. 9 W.; southeasterly, 33½ miles, around the headwaters of the drainage into the Siuslaw, on and adjacent to the boundary line between Lane and Douglas counties to the ¼ section corner between sections 26 and 35, T. 21 S., R. 4 W.; northeasterly and westerly, 15 miles, around the headwaters of the drainage into the Siuslaw River, northerly, 24 miles, around the headwaters of Wolf Creek, Noti Creek and Long Creek; westerly and southerly 12 miles, around the headwaters of Lake Creek; northwesterly, 6 miles, around the headwaters of Taylor Creek to Taylor Butte, the place of beginning, all as shown in more detail on maps on file in the Bureau of Land Management, Department of the Interior, Washington, D. C., and in the offices of the Oregon and California Revested Lands Administration in Portland, Eugene, Roseburg, Salem and Coos Bay, Oregon.

2. This Order supersedes Order No. 617 of the Director, Bureau of Land Management, dated June 14, 1956.

/s/ Edward Woozley
Director

Bureau Order distribution list

UNITED STATES
DEPARTMENT OF THE INTERIOR
Bureau of Land Management
Washington 25, D. C.

ORDER NO. 628 March 29, 1957

Subject: Siuslaw Master Unit for Revested Oregon and California Railroad Grant Lands in Oregon

Pursuant to the authority contained in Section 1 of the Act of August 28, 1937 (50 Stat. 874) and in Order No. 2583, Amendment No. 12, September 17, 1954, of the Secretary of the Interior, it is hereby ordered as follows:

1. The boundaries of the Siuslaw Master Unit, established by Order No. 2285, dated December 11, 1946, as amended, are redefined to read as follows:

> Beginning in Sec. 17, T. 15 S., R. 8 W., W.M., Oregon, at the summit of Taylor Butte, thence along the lines of legal subdivisions, southwesterly, 7½ miles, around the headwaters of Deadwood Creek; southerly 9½ miles, to the Siuslaw River; southeasterly, 8½ miles, around the headwaters of the drainage into the Siuslaw River, to the line between Lane and Douglas counties, sections 1, 2, 11 and 12, T. 19 S., R. 9 W.; southeasterly, 33½ miles, around the headwaters of the drainage into the Siuslaw, on and adjacent to the boundary line between Lane and Douglas counties to the ¼ section corner between sections 26 and 35, T. 21 S., R. 4 W.; northeasterly and westerly, 15 miles, around the headwaters of the drainage into the Siuslaw River, northerly, 24 miles, around the headwaters of Wolf Creek, Noti Creek and Long Creek; westerly and southerly 12 miles, around the headwaters of Lake Creek; northwesterly, 6 miles, around the headwaters of Taylor Creek to Taylor Butte, the place of beginning, all as shown in more detail on maps on file in the Bureau of Land Management, Department of

This Order supersedes Order No. 2283 of the Director
Bureau of Land Management
Washington 25, D. C.

ORDER NO. 2283 (Amend. Issued 1/)
Director

March 29, 1957

Subject: Siskiyou Border Unit for Invaded Oregon and California Railroad Grant Lands in Oregon

Pursuant to the authority contained in Section 1 of the Act of August 28, 1937 (50 Stat. 874) and in Order No. 2283, Amendment No. 12, September 17, 1954, of the Secretary of the Interior,

it is hereby ordered as follows:

1. The boundaries of the Siskiyou Border Unit, established by Order No. 2283, dated December 11, 1956, as amended, are redefined to read as follows:

Beginning in Sec. 17, T. 17 S., R. 8 W., W.M., Oregon, at the mouth of Taylor Butte, thence along the line of legal subdivisions, southwesterly, 7½ miles, around the headwaters of Deadwood Creek; southerly 7½ miles, to the Siskiyou River; southwesterly, 8½ miles, around the headwaters of the drainage into the Siskiyou River, to the line between Lane and Douglas counties, sections 1, 2, 11 and 12, T. 19 S., R. 9 W.; northwesterly, 22½ miles, around the headwaters of the drainage into the Siskiyou, on and adjacent to the boundary line between Lane and Douglas counties to the ¼ section corner between sections 24 and 25, T. 21 S., R. 4 W.; northwesterly and westerly, 13 miles, around the headwaters of the drainage into the Siskiyou River; northerly, 14 miles, around the headwaters of Wolf Creek, Lost Creek and Long Creek; westerly and northerly 11 miles, around the headwaters of Lake Creek; northwesterly, 6 miles, around the headwaters of Taylor Creek to Taylor Butte, the place of beginning, all as shown in more detail on maps on file in the Bureau of Land Management, Department of

the Interior, Washington, D. C., and in the offices of the Oregon and California Revested Lands Administration in Portland, Eugene, Roseburg, Salem and Coos Bay, Oregon.

2. This Order supersedes Order No. 617 of the Director, Bureau of Land Management, dated June 14, 1956.

Director

the Interior, Washington, D. C., and in the offices of the Oregon and California Revested Lands Administration in Portland, Oregon, Roseburg, Salem and Coos Bay, Oregon.

2. This Order supersedes Order No. 117 of the Director, Bureau of Land Management, dated June 20, 1956.

UNITED STATES
DEPARTMENT OF THE INTERIOR
Bureau of Land Management
Washington 25, D. C.

ORDER NO. 629 March 29, 1957

Subject: Alsea-Rickreall Master Unit for Revested Oregon and California Railroad Grant Lands in Oregon

Pursuant to the authority contained in Section 1 of the Act of August 28, 1937 (50 Stat. 874), and in Order No. 2583, Amendment No.12, September 17, 1954, of the Secretary of the Interior, it is hereby ordered as follows:

1. The boundaries of the Alsea-Rickreall Master Unit established by Order 2380, November 29, 1947, are redefined to read as follows:

> Beginning at the NE corner of Sec. 24, T. 6 S., R. 6 W., W.M., Oregon, thence following lines of legal subdivisions west 4 miles; southerly 4 miles; westerly 18 miles to the NW corner Sec. 14, T. 7 S., R. 9 W.; southeasterly 11 miles to the NE corner Sec. 16, T. 8 S., R. 8 W.; south 10 miles; west 3 miles; southerly 33 miles to the SW corner Sec. 13, T. 15 S., R. 9 W.; easterly 4 miles; southerly 2 miles; easterly 3½ miles; northerly 3½ miles; easterly 20 miles along Lane-Benton county line to the Willamette River in Sec. 8, T. 15 S., R. 4 W.; northerly along said river to the Polk-Benton county line at north boundary of Sec. 11, T. 10 S., R. 4 W.; west 10½ miles to the SW corner Sec. 6, T. 10 S., R. 5 W.; north 22 miles to place of beginning, as shown in detail on the map entitled "Map of Western Oregon, showing O. & C. Lands," dated September 18, 1947, on file in the Bureau of Land Management, Department of the Interior, Washington, D. C., and Portland, Salem, Eugene, Roseburg, Coos Bay, and Medford, Oregon.

[illegible]

[illegible]

[illegible]

2. This Order supersedes Order No. 2380 of the Secretary of the Interior, dated November 29, 1947.

Director

6. This Order supersedes Order No. 2360 of the Secretary of the Interior, dated November 29, 1947.

Director

UNITED STATES
DEPARTMENT OF THE INTERIOR
Bureau of Land Management
Washington 25, D. C.

ORDER NO. 629 March 29, 1957

Subject: Alsea-Rickreall Master Unit for Revested Oregon and California Railroad Grant Lands in Oregon

Pursuant to the authority contained in Section 1 of the Act of August 28, 1937 (50 Stat. 874), and in Order No. 2583, Amendment No. 12, September 17, 1954, of the Secretary of the Interior, it is hereby ordered as follows:

1. The boundaries of the Alsea-Rickreall Master Unit established by Order 2380, November 29, 1947, are redefined to read as follows:

> Beginning at the NE corner of Sec. 24, T. 6 S., R. 6 W., W.M., Oregon, thence following lines of legal subdivisions west 4 miles; southerly 4 miles; westerly 18 miles to the NW corner Sec. 14, T. 7 S., R. 9 W., southeasterly 11 miles to the NE corner Sec. 16, T. 8 S., R. 8 W.; south 10 miles; west 3 miles; southerly 33 miles to the SW corner Sec. 13, T. 15 S., R. 9 W.; easterly 4 miles; southerly 2 miles; easterly 3½ miles; northerly 3½ miles; easterly 20 miles along Lane-Benton county line to the Willamette River in Sec. 8, T. 15 S., R. 4 W.; northerly along said river to the Polk-Benton county line at north boundary of Sec. 11, T. 10 S., R. 4 W.; west 10½ miles to the SW corner Sec. 6, T. 10 S., R. 5 W.; north 22 miles to place of beginning, as shown in detail on the map entitled "Map of Western Oregon, showing O. & C. Lands," dated September 18, 1947, on file in the Bureau of Land Management, Department of the Interior, Washington, D. C., and Portland, Salem, Eugene, Roseburg, Coos Bay, and Medford, Oregon.

2. This Order supersedes Order No. 2380 of the Secretary of the Interior, dated November 29, 1947.

/s/ Edward Woozley
Director

Bureau Order distribution list

UNITED STATES
DEPARTMENT OF THE INTERIOR
Bureau of Land Management
Washington 25, D. C.

ORDER NO. 630

March 29, 1957

Subject: Klamath Master Unit for Revested Oregon and California Railroad Grant Lands in Oregon

Pursuant to the authority contained in Section 1 of the Act of August 28, 1937 (50 Stat. 874), and in Order No. 2583, Amendment No. 12, September 17, 1954, of the Secretary of the Interior it is hereby ordered as follows:

1. The boundaries of the Klamath Master Unit established by Order 2381, November 29, 1947, are redefined to read as follows:

> Beginning at the S¼ corner Sec. 13, T. 41 S., R. 3 E., W.M., Oregon, on the California-Oregon state line, thence along lines of legal subdivision as follows: northwesterly 6 miles to Soda Mountain; northerly 10 miles to Table Mountain; northeasterly 7 miles to the N¼ corner Sec. 24, T. 38 S., R. 3 E., easterly 6 miles to Jackson, Klamath county line at the east ¼ corner Sec. 24, T. 38 S., R. 4 E.; north along said county line 18 miles; east 1 mile; south 2½ miles to the SE corner Sec. 31, T. 35 S., R. 5 E.; east 3 miles; south 4 miles to the NE corner Sec. 13, T. 36 S., R. 5 E.; south 9½ miles; east 6 miles to the east ¼ corner Sec. 36 T. 37 S., R. 6 E.; south 12½ miles to NE corner T. 40 S. R. 6 E.; east 6 miles to NE corner T. 40 S., R. 7 E; south 8½ miles to Oregon-California state line at SE corner Sec. 13, T. 41 S., R. 7 E.; west along said state line to place of beginning, as shown in detail on the map entitled "Map of western Oregon, showing O. & C. Lands," dated September 18, 1947, on file in the Bureau of Land Management, Department of the Interior, Washington, D. C., Portland, Salem, Eugene, Roseburg, Coos Bay, and Medford, Oregon.

UNITED STATES
DEPARTMENT OF THE INTERIOR
Bureau of Land Management
Washington 25, D. C.

March 28, 1972

Serial No. [illegible]

Subject: Proposed Bureau Plan for Burnished Oregon and Pacific-Northwest Coast Lands in Oregon

Pursuant to the authority conferred in Section 3 of the Act of August 30, 1957 (30 Stat. 909), and in Order No. 3070, dated Nov. 19, September 17, 1954, of the Secretary of the Interior, it is hereby ordered as follows:

1. The boundaries of the Elmonds Ridge Unit, established by Order 3181, November 30, 1957, are relocated to read as follows:

Beginning at the SE corner Sec. 13, T. 22 N., R. 3 E., W.M., thence, on the California-Oregon main line, thence along lines of legal subdivision or fractions northwesterly 1 miles to Pole Mountain; northerly 10 miles to Table Mountain; northwesterly 7 miles to the SE corner Sec. 31, T. 28 N., R. 3 E., westerly 6 miles to Tumbers, Elmonds county line in the work 2 corner Sec. 34, T. 28 N., R. 4 E.; north along Elmonds county line 14 miles; east 3 miles; south 14 miles to the SW corner Sec. 32, T. 28 N., R. 3 E.; east 7 miles; south 4 miles to the SE corner Sec. 13, T. 26 N., R. 3 E.; south 6 miles; west 1 miles to the work 2 corner Sec. 1, T. 25 N., R. 3 E.; south 3½ miles to SE corner T. 25 N., R. 3 E.; west 4 miles to SE corner T. 25 N., R. 2 E.; south 3½ miles to SE corner T. 26 N., R. 2 E.; west 4 miles to SE corner T. 26 N., R. 1 E.; south 4 miles to SE corner T. 27 N., R. 1 E.; west along main line to point of beginning, be known as Unit on the map entitled "Map of western Oregon showing T. 2 S. Lands," dated September 14, 1967, on file in the Bureau of Land Management.

Department of the Interior, Washington, D. C., Portland, Salem, Eugene, Roseburg, New Mex, and Medford, Oregon.

2. This Order supersedes Order No. 2381 of the Secretary of the Interior, dated November 29, 1947.

Director

UNITED STATES
DEPARTMENT OF THE INTERIOR
Bureau of Land Management
Washington 25, D. C.

ORDER NO. 630 March 29, 1957

Subject: Klamath Master Unit for Revested Oregon and California Railroad Grant Lands in Oregon

Pursuant to the authority contained in Section 1 of the Act of August 28, 1937 (50 Stat. 874), and in Order No. 2583, Amendment No. 12, September 17, 1954, of the Secretary of the Interior it is hereby ordered as follows:

1. The boundaries of the Klamath Master Unit established by Order 2381, November 29, 1947, are redefined to read as follows:

> Beginning at the S¼ corner Sec. 13, T. 41 S., R. 3 E., W.M., Oregon, on the California-Oregon state line, thence along lines of legal subdivision as follows: northwesterly 6 miles to Soda Mountain; northerly 10 miles to Table Mountain; northeasterly 7 miles to the E¼ corner Sec. 24, T. 38 S., R. 3 E., easterly 6 miles to Jackson, Klamath county line at the east ¼ corner Sec. 24, T. 38 S., R. 4 E.; north along said county line 18 miles; east 1 mile; south 2½ miles to the SE corner Sec. 31, T. 35 S., R. 5 E.; east 3 miles; south 4 miles to the NE corner Sec. 13, T. 36 S., R. 5 E.; south 9½ miles; east 6 miles to the east ¼ corner Sec. 36 T. 37 S., R. 6 E.; south 12½ miles to NE corner T. 40 S. R. 6 E.; east 6 miles to NE corner T. 40 S., R. 7 E; south 8½ miles to Oregon-California state line at SE corner Sec. 13, T. 41 S., R. 7 E.; west along said state line to place of beginning, as shown in detail on the map entitled "Map of western Oregon, showing O. & C. Lands," dated September 18, 1947, on file in the Bureau of Land Management, Department of the Interior, Washington, D. C., Portland, Salem, Eugene, Roseburg, Coos Bay, and Medford, Oregon.

2. This Order supersedes Order No. 2381 of the Secretary of the Interior, dated November 29, 1947.

/s/ Edward Woozley
Director

Bureau Order distribution list

UNITED STATES
DEPARTMENT OF THE INTERIOR
Bureau of Land Management
Washington 25, D. C.

ORDER NO. 631 March 29, 1957

Subject: Jackson Master Unit for Revested Oregon and California Railroad Grant Lands in Oregon

Pursuant to the authority contained in Section 1 of the Act of August 28, 1937 (50 Stat. 874), and in Order No. 2583, Amendment No. 12, September 17, 1954, of the Secretary of the Interior it is hereby ordered as follows:

1. The boundaries of the Jackson Master Unit established by Order 2382, November 29, 1947, are redefined to read as follows:

> Beginning at NE corner Sec. 22, T. 32 S., R. 2 W., W.M., Oregon, thence following lines of legal subdivision, as follows: southwesterly 8 miles and westerly 8 miles to Cedar Springs Mountain along divide between Evans and Cow Creeks; southwesterly 13 miles along divide between Evans and Grave Creeks to W¼ corner, Sec. 7, T. 34 S., R. 4 W.; southerly 20 miles to Grants Pass Mountain; southeasterly 8 miles to Billy Mountain; southwesterly 18 miles to Grayback Mountain in Secs. 5 and 8, T. 40 S., R. 5 W.; southerly 10 miles (along the divide) between Sucker Creek and Applegate River to California-Oregon state line in Sec. 13, T. 41 S., R. 6 W.; east along state line to divide between Jenny and Deer Creeks at the S¼ corner Sec. 13, T. 41 S., R. 3 E.; northwesterly 6 miles to Soda Mountain; northerly 10 miles to Table Mountain; northeasterly 7 miles to E¼ corner Sec. 24, T. 38 S., R. 3 E.; easterly 6 miles to Jackson-Klamath county line at the east ¼ corner, Sec. 24, T. 38 S., R. 4 E.; north along county line 15½ miles to the NE corner Sec. 1, T. 36 S., R. 4 E.; west 6 miles; north 13 miles to NE corner Sec. 36, T. 33 S., R. 3 E.; northwesterly 8 miles to west boundary of Sec. 7, T. 33 S., R. 3 E., on the Rogue River; northerly 16 miles to the Rogue-Umpqua Rivers divide in Sec. 4, T. 31 S., R. 2 E.; southwesterly along said divide 16 miles to Pilot Rock in Sec. 22 T. 32 S., R. 1 W.; westerly 6 miles to the

place of beginning, as shown in detail on the map entitled "Map of Western Oregon, showing O. & C. Lands," dated September 18, 1947, on file in the Bureau of Land Management, Department of the Interior, Washington, D. C., Portland, Salem, Coos Bay, Eugene, Roseburg, and Medford, Oregon.

2. This Order supersedes Order No. 2382 of the Secretary of the Interior, dated November 29, 1947.

/s/ Edward Woozley
Director

Bureau Order distribution list

UNITED STATES
DEPARTMENT OF THE INTERIOR
Bureau of Land Management
Washington 25, D. C.

March 29, 1957

ORDER NO. 631

Subject: Jackson Master Unit for Revested Oregon and California Railroad Grant Lands in Oregon

Pursuant to the authority contained in Section 1 of the Act of August 28, 1937 (50 Stat. 874), and in Order No. 2583, Amendment No. 12, September 17, 1954, of the Secretary of the Interior it is hereby ordered as follows:

1. The boundaries of the Jackson Master Unit established by Order 2382, November 29, 1947, are redefined to read as follows:

Beginning at NE corner Sec. 22, T. 32 S., R. 2 W., W.M., Oregon, thence following lines of legal subdivision, as follows: southwesterly 8 miles and westerly 8 miles to Cedar Springs Mountain along divide between Evans and Cow Creeks; southwesterly 13 miles along divide between Evans and Grave Creeks to W¼ corner, Sec. 7, T. 34 S., R. 4 W.; southerly 20 miles to Grants Pass Mountain; southeasterly 8 miles to Billy Mountain; southwesterly 18 miles to Grayback Mountain in Secs. 5 and 8, T. 40 S., R. 5 W.; southerly 10 miles (along the divide) between Sucker Creek and Applegate River to California-Oregon state line in Sec. 13, T. 41 S., R. 6 W.; east along state line to divide between Jenny and Deer Creeks at the S¼ corner Sec. 13, T. 41 S., R. 3 E.; northwesterly 6 miles to Soda Mountain; northerly 10 miles to Table Mountain; northeasterly 7 miles to N¼ corner Sec. 24, T. 38 S., R. 3 E.; easterly 6 miles to Jackson-Klamath county line at the east ¼ corner, Sec. 24, T. 38 S., R. 4 E.; north along county line 15½ miles to the NE corner Sec. 1, T. 36 S., R. 4 E.; west 6 miles; north 13 miles to NE corner Sec. 36, T. 33 S., R. 3 E.; northwesterly 8 miles to west boundary of Sec. 7, T. 33 S., R. 3 E., on the Rogue River; northerly 16 miles to the

Rogue-Umpqua Rivers divide in Sec. 4, T. 31 S., R. 2 E.; southwesterly along said divide 16 miles to Pilot Rock in Sec. 22 T. 32 S., R. 1 W.; westerly 6 miles to the place of beginning, as shown in detail on the map entitled "Map of Western Oregon, showing O. & C. Lands," dated September 18, 1947, on file in the Bureau of Land Management, Department of the Interior, Washington, D. C., Portland, Salem, Coos Bay, Eugene, Roseburg, and Medford, Oregon.

2. This Order supersedes Order No. 2382 of the Secretary of the Interior, dated November 29, 1947.

Director

RECEIVED
Bureau of Land Management
State Supervisor
APR 19 1957
Denver, Colorado

UNITED STATES
DEPARTMENT OF THE INTERIOR
Bureau of Land Management
Washington 25, D. C.

DEPARTMENT OF THE INTERIOR
BUREAU OF LAND MANAGEMENT
1957 APR 19 PM 1 00

ORDER NO. 631 March 29, 1957

Subject: Jackson Master Unit for Revested Oregon and California Railroad Grant Lands in Oregon

Pursuant to the authority contained in Section 1 of the Act of August 28, 1937 (50 Stat. 874), and in Order No. 2583, Amendment No. 12, September 17, 1954, of the Secretary of the Interior it is hereby ordered as follows:

1. The boundaries of the Jackson Master Unit established by Order 2382, November 29, 1947, are redefined to read as follows:

Beginning at NE corner Sec. 22, T. 32 S., R. 2 W., W.M., Oregon, thence following lines of legal subdivision, as follows: southwesterly 8 miles and westerly 8 miles to Cedar Springs Mountain along divide between Evans and Cow Creeks; southwesterly 13 miles along divide between Evans and Grave Creeks to W¼ corner, Sec. 7, T. 34 S., R. 4 W.; southerly 20 miles to Grants Pass Mountain; southeasterly 8 miles to Billy Mountain; southwesterly 18 miles to Grayback Mountain in Secs. 5 and 8, T. 40 S., R. 5 W.; southerly 10 miles (along the divide) between Sucker Creek and Applegate River to California-Oregon state line in Sec. 13, T. 41 S., R. 6 W.; east along state line to divide between Jenny and Deer Creeks at the S¼ corner Sec. 13, T. 41 S., R. 3 E.; northwesterly 6 miles to Soda Mountain; northerly 10 miles to Table Mountain; northeasterly 7 miles to E¼ corner Sec. 24, T. 38 S., R. 3 E.; easterly 6 miles to Jackson-Klamath county line at the east ¼ corner, Sec. 24, T. 38 S., R. 4 E.; north along county line 15½ miles to the NE corner Sec. 1, T. 36 S., R. 4 E.; west 6 miles; north 13 miles to NE corner Sec. 36, T. 33 S., R. 3 E.; northwesterly 8 miles to west boundary of Sec. 7, T. 33 S., R. 3 E., on the Rogue River; northerly 16 miles to the Rogue-Umpqua Rivers divide in Sec. 4, T. 31 S., R. 2 E.; southwesterly along said divide 16 miles to Pilot Rock in Sec. 22 T. 32 S., R. 1 W.; westerly 6 miles to the

ADJUDICATORS
For Review
Lajoie

place of beginning, as shown in detail on the map entitled "Map of Western Oregon, showing O. & C. Lands," dated September 18, 1947, on file in the Bureau of Land Management, Department of the Interior, Washington, D. C., Portland, Salem, Coos Bay, Eugene, Roseburg, and Medford, Oregon.

2. This Order supersedes Order No. 2382 of the Secretary of the Interior, dated November 29, 1947.

/s/ Edward Woozley
Director

Bureau Order distribution list

UNITED STATES
DEPARTMENT OF THE INTERIOR
Bureau of Land Management
Washington 25, D. C.

March 29, 1957

ORDER NO. 632

Subject: Josephine Master Unit for Revested Oregon and California Railroad Grant lands in Oregon

Pursuant to the authority contained in Section 1 of the Act of August 28, 1937 (50 Stat. 874), and in Order No. 2583, Amendment No. 12, September 17, 1954, of the Secretary of the Interior, it is hereby ordered as follows:

1. The boundaries of the Josephine Master Unit established by Order No. 2383, November 29, 1947, are redefined to read as follows:

Beginning at the SW corner Sec. 4, T. 31 S., R. 9 W., W.M., Oregon, thence following lines of legal subdivision as follows: easterly 4½ miles to Big Dutchman's Butte; southeasterly 10 miles to West Fork Station on Cow Creek; easterly 32 miles to Castle Peak; southeasterly 8 miles to Threehorn Mountain in Sec. 14, T. 32 S., R. 2 W.; southwesterly 8 miles and westerly 8 miles to Cedar Springs Mountain along divide between Evans Creek and Cow Creek; southwesterly 13 miles along divide between Evans Creek and Grove Creek to W¼ corner Sec. 7, T. 34 S., R. 4 W.; southerly 20 miles to Grants Pass Mountain; southeasterly 8 miles to Billy Mountain; southwesterly 18 miles to Grayback Mountain in Secs. 5 and 8, T. 40 S., R. 5 W., southerly 10 miles (along divide) between Sucker Creek and Applegate River to California, Oregon state line in Sec. 13, T. 41 S., R. 6 W.; west along state line 12 miles to grant limit; northerly along grant limit to Sec. 29, T. 35 S., R. 11 W.; northeasterly 20 miles to Sec. 12, T. 34 S., R. 10 W.; northwesterly 12 miles to Coos-Curry county line in Sec. 6, T. 33 S., R. 10 W.; northeasterly

20 miles alongCoquille and Rogue Rivers divide to place of beginning, as shown in detail on the map entitled "Map of Western Oregon, showing O. & C. Lands," dated September 18, 1947, on file in the Bureau of Land Management, Department of the Interior, Washington, D. C., Portland, Salem, Eugene, Coos Bay, Medford, and Roseburg, Oregon.

2. This order supersedes Order No. 2383 of the Secretary of the Interior, dated November 29, 1947.

Edward Weston

Director

UNITED STATES
DEPARTMENT OF THE INTERIOR
Bureau of Land Management
Washington 25, D. C.

ORDER NO. 632 March 29, 1957

Subject: Josephine Master Unit for Revested Oregon and California Railroad Grant lands in Oregon

Pursuant to the authority contained in Section 1 of the Act of August 28, 1937 (50 Stat. 874), and in Order No. 2583, Amendment No. 12, September 17, 1954, of the Secretary of the Interior, it is hereby ordered as follows:

1. The boundaries of the Josephine Master Unit established by Order No. 2383, November 29, 1947, are redefined to read as follows:

> Beginning at the SW corner Sec. 4, T. 31 S., R. 9 W., W.M., Oregon, thence following lines of legal subdivision as follows: easterly 4½ miles to Big Dutchman's Butte; southeasterly 10 miles to West Fork Station on Cow Creek; easterly 32 miles to Castle Peak; southeasterly 8 miles to Threehorn Mountain in Sec. 14, T. 32 S., R. 2 W.; southwesterly 8 miles and westerly 8 miles to Cedar Springs Mountain along divide between Evans Creek and Cow Creek; southwesterly 13 miles along divide between Evans Creek and Grove Creek to W¼ corner Sec. 7, T. 34 S., R. 4 W.; southerly 20 miles to Grants Pass Mountain; southeasterly 8 miles to Billy Mountain; southwesterly 18 miles to Grayback Mountain in Secs. 5 and 8, T. 40 S., R. 5 W., southerly 10 miles (along divide) between Sucker Creek and Applegate River to California, Oregon state line in Sec. 13, T. 41 S., R. 6 W.; west along state line 12 miles to grant limit; northerly along grant limit to Sec. 29, T. 35 S., R. 11 W.; northeasterly 20 miles to Sec. 12, T. 34 S., R. 10 W.; northwesterly 12 miles to Coos-Curry county line in Sec. 6, T. 33 S., R. 10 W.; northeasterly 20 miles along Coquille and Rogue Rivers divide to place of beginning, as shown in detail on the map entitled "Map of Western Oregon, showing O. & C. Lands," dated September 18, 1947, on file in the

Bureau of Land Management, Department of the Interior, Washington, D. C., Portland, Salem, Eugene, Coos Bay, Medford, and Roseburg, Oregon.

2. This order supersedes Order No. 2383 of the Secretary of the Interior, dated November 29, 1947.

/s/ Edward Woozley
Director

Bureau Order distribution list

UNITED STATES
DEPARTMENT OF THE INTERIOR
Bureau of Land Management
Washington 25, D. C.

ORDER NO. 633 March 29, 1957

Subject: South Umpqua Master Unit for Revested Oregon and California Railroad Grant Lands in Oregon

Pursuant to the authority contained in Section 1 of the Act of August 28, 1937 (50 Stat. 874), and in Order No. 2583, Amendment No. 12, September 17, 1954, of the Secretary of the Interior it is hereby ordered as follows:

1. The boundaries of the South Umpqua Master Unit established by Order 2384, November 29, 1947 are redefined to read as follows:

> Beginning at the NE corner Sec. 8, T. 28 S., R. 1 E., W.M., Oregon, thence following lines of legal subdivisions as follows: southerly 20 miles to the South Umpqua-Rogue River divide at Sec. 20, T. 31 S., R. 1 E.; southwesterly 10 miles to Pilot Rock, westerly 6 miles to Three Horn Mountain; northwesterly 8 miles to Green L.O.; westerly 20 miles along the divide between Cow Creek and the Umpqua River to S¼ corner Sec. 36, T. 31 S., R. 6 W.; northerly 18 miles to the town of Myrtle Creek; northeasterly 14 miles along the divide between Deer and Myrtle Creeks to the NW corner Sec. 6, T. 28 S., R. 4 W.; easterly 7 miles; southeasterly 14 miles along divide between Cavitt and Myrtle Creeks to the E¼ corner Sec. 33, T. 28 S., R. 2 W.; northeasterly 18 miles along divide between Cavitt and Deadman Creeks; and Little River and Deadman Creek to place of beginning, as shown in detail on map entitled "Map of Western Oregon, showing O&C Lands," dated September 18, 1947, on file in the Bureau of Land Management, Department of the Interior, Washington, D.C., Portland, Salem, Eugene, Roseburg, Coos Bay, and Medford, Oregon.

2. This Order supersedes Order No. 2384 of the Secretary of the Interior, dated November 29, 1947.

/s/ Edward Woozley
Director

Bureau Order distribution list

UNITED STATES
DEPARTMENT OF THE INTERIOR
Bureau of Land Management
Washington 25, D. C.

March 29, 1957

ORDER NO. 633

Subject: South Umpqua Master Unit for Revested Oregon and California Railroad Grant Lands in Oregon

Pursuant to the authority contained in Section 1 of the Act of August 28, 1937 (50 Stat. 874), and in Order No. 2583, Amendment No. 12, September 17, 1954, of the Secretary of the Interior it is hereby ordered as follows:

1. The boundaries of the South Umpqua Master Unit established by Order 2384, November 29, 1947 are redefined to read as follows:

> Beginning at the NE corner Sec. 8, T. 28 S., R. 1 E., W.M., Oregon, thence following lines of legal subdivisions as follows: southerly 20 miles to the South Umpqua-Rogue River divide at Sec. 20, T. 31 S., R. 1 E.; southwesterly 10 miles to Pilot Rock, westerly 6 miles to Three Horn Mountain; northwesterly 8 miles to Green L.O.; westerly 20 miles along the divide between Cow Creek and the Umpqua River to S¼ corner Sec. 36, T. 31 S., R. 6 W.; northerly 18 miles to the town of Myrtle Creek; northeasterly 14 miles along the divide between Deer and Myrtle Creeks to the NW corner Sec. 6, T. 28 S., R. 4 W.; easterly 7 miles; southeasterly 14 miles along divide between Cavitt and Myrtle Creeks to the E¼ corner Sec. 33, T. 28 S., R. 2 W.; northeasterly 18 miles along divide between Cavitt and Deadman Creeks; and Little River and Deadman Creek to place of beginning, as shown in detail on map entitled "Map of Western Oregon, showing O&C Lands," dated September 18, 1947, on file in the Bureau of Land Management, Department of the Interior, Washington, D.C., Portland, Salem, Eugene, Roseburg, Coos Bay, and Medford, Oregon.

2. This Order supersedes Order No. 2384 of the Secretary of the Interior, dated November 29, 1947.

Director

UNITED STATES
DEPARTMENT OF THE INTERIOR
Bureau of Land Management
Washington 25, D. C.

March 29, 1957

ORDER NO. 634

Subject: Douglas Master Unit for Revested Oregon and California Railroad and Reconveyed Coos Bay Wagon Road Grant lands in Oregon

Pursuant to the authority contained in Section 1 of the Act of August 28, 1937 (50 Stat. 874), and in Order No. 2583, Amendment No. 12, September 17, 1954, of the Secretary of the Interior it is hereby ordered as follows:

1. The boundaries of the Douglas Master Unit established by Order No. 2386, November 29, 1947, are redefined to read as follows:

Beginning at the NE corner of Sec. 15, T. 23 S., R. 2 E., W.M., Oregon, thence following lines of legal subdivisions as follows: west 5½ miles to N¼ corner of Sec. 14, T. 23 S., R. 1 E.; southwesterly 9 miles; westerly 21 miles along the Willamette-Umpqua divide to the SW corner Sec. 36, T. 23 S., R. 4 W.; northerly 17 miles to the center of Sec. 2, T. 21 S., R. 4 W.; westerly 30 miles along the Smith River-Siuslaw River divide to E¼ corner of Sec. 17, T. 20 S., R. 7 W.; southerly 14 miles to Elkton on the Umpqua River; southerly 25 miles along said river to E¼ corner Sec. 31, T. 23 S., R. 7 W.; westerly 5 miles; southerly 30 miles along Coos, Umpqua River divide to the NE corner of Sec. 36, T. 27 S., R. 8 W.; westerly 5 miles to Coos-Douglas County line; southerly 6 miles to the NE corner Sec. 1, T. 29 S., R. 9 W.; west 3 miles; south 13 miles to the SW corner Sec. 3, T. 31 S., R. 9 W.; east 4½ miles to Big Dutchman's Butte; southeasterly 10 miles to West Fork Station on Cow Creek; easterly

14 miles to the south ¼ corner, Sec. 36, T. 31 S., R. 6 W.; northerly 18 miles to the town of Myrtle Creek; northeasterly 14 miles along divide between Deer Creek and Myrtle Creek to the NW corner Sec. 6, T. 28 S., R. 4 W.; easterly 7 miles; southeasterly 14 miles along the divide between Cavitt Creek, Deadman Creek and Little River, Deadman Creek to grant limit at Sec. 36, T. 27 S., R. 1 W.; northerly along grant limit to place of beginning, as shown in detail on the map entitled "Map of Western Oregon, showing O. & C. Lands," dated September 18, 1947, on file in the Bureau of Land Management, Department of the Interior, Washington, D. C., Portland, Salem, Eugene, Roseburg, Coos Bay, and Medford, Oregon.

2. This order supersedes Order 2386 of the Secretary of the Interior, dated November 29, 1947.

/s/ [signature]
Director

UNITED STATES
DEPARTMENT OF THE INTERIOR
Bureau of Land Management
Washington 25, D. C.

March 29, 1957

ORDER NO. 634

Subject: Douglas Master Unit for Revested Oregon and California Railroad and Reconveyed Coos Bay Wagon Road Grant lands in Oregon

Pursuant to the authority contained in Section 1 of the Act of August 28, 1937 (50 Stat. 874), and in Order No. 2583, Amendment No. 12, September 17, 1954, of the Secretary of the Interior it is hereby ordered as follows:

1. The boundaries of the Douglas Master Unit established by Order No. 2386, November 29, 1947, are redefined to read as follows:

Beginning at the NE corner of Sec. 15, T. 23 S., R. 2 E., W.M., Oregon, thence following lines of legal subdivisions as follows: west 5½ miles to N¼ corner of Sec. 14, T. 23 S., R. 1 E.; southwesterly 9 miles; westerly 21 miles along the Willamette-Umpqua divide to the SW corner Sec. 36, T. 23 S., R.4 W.; northerly 17 miles to the center of Sec. 2, T. 21 S., R. 4 W.; westerly 30 miles along the Smith River-Siuslaw River divide to E¼ corner of Sec. 17, T. 20 S., R. 7 W.; southerly 14 miles to Elkton on the Umpqua River; southerly 25 miles along said river to E¼ corner Sec. 31, T. 23 S., R. 7 W.; westerly 5 miles; southerly 30 miles along Coos, Umpqua River divide to the NE corner of Sec. 36, T. 27 S., R. 8 W.; westerly 5 miles to Coos-Douglas County line; southerly 6 miles to the NE corner Sec. 1, T. 29 S., R. 9 W.; west 3 miles; south 13 miles to the SW corner Sec. 3, T. 31 S., R. 9 W.; east 4½ miles to Big Dutchman's Butte; southeasterly 10 miles to West Fork Station on Cow Creek; easterly 14 miles to the south ¼ corner, Sec. 36, T. 31 S., R. 6 W.; northerly 18 miles to the town of Myrtle Creek; northeasterly 14 miles along divide between Deer Creek and Myrtle Creek to the NW corner Sec. 6, T. 28 S., R. 4 W.; easterly 7 miles, southeasterly 14 miles along the divide between Cavitt Creek, Deadman Creek and Little River, Deadman Creek to grant limit at Sec. 36, T. 27 S., R. 1 W.; northerly along grant limit to place of beginning, as shown in detail on the map entitled "Map of Western Oregon, showing

O. & C. Lands," dated September 18, 1947, on file in the Bureau of Land Management, Department of the Interior, Washington, D. C., Portland, Salem, Eugene, Roseburg, Coos Bay, and Medford, Oregon.

2. This order supersedes Order 2386 of the Secretary of the Interior, dated November 29, 1947.

/s/ Edward Woozley
Director

UNITED STATES
DEPARTMENT OF THE INTERIOR
Bureau of Land Management
Washington 25, D. C.

March 29, 1957

ORDER NO. 635

Subject: Clackamas-Molalla Master Unit for Revested Oregon and California Railroad Grant lands in Oregon

Pursuant to the authority contained in Section 1 of the Act of August 28, 1937 (50 Stat. 874), and in Order No. 2583, Amendment No. 12, September 17, 1954, of the Secretary of the Interior it is hereby ordered as follows:

1. The boundaries of the Clackamas-Molalla Master Unit established by Order No. 2387, November 29, 1947, are redefined to read as follows:

> Beginning at the NE corner of Sec. 1, T. 1 S., R. 5 E., W.M., Oregon, thence west 9 miles; south 9 miles; west 9 miles; south 9 miles to the SE corner Sec. 36, T. 3 S., R. 2 E.; west 6 miles; south 15 miles to the SW corner Sec. 18, T. 6 S., R. 2 E.; east 4 miles; thence following line of legal subdivision; southerly 9 miles; easterly 7 miles to Sec. 1, T. 8 S., R. 3 E.; southerly 3 miles; northeasterly 8 miles to the NE corner Sec. 1, T. 8 S., R. 4 E.; thence north 6 miles; east 6 miles; north 6 miles; east 4 miles; north 6 miles; east 2 miles to SE corner T. 4 S., R. 6 E.; north 6 miles; east 1 mile; north 12 miles; to the NE corner Sec. 5, T. 2 S., R. 7 E.; west 7 miles; north 6 miles to the place of beginning, as shown in detail on the map entitled "Map of Western Oregon, showing O. & C. Lands," dated September 18, 1947, on file in the Bureau of Land Management, Department of the Interior, Washington, D. C., Portland, Salem, Eugene, Roseburg, Coos Bay, and Medford, Oregon.

2. This order supersedes Order 2387 of the Secretary of the Interior, dated November 29, 1947.

Director

UNITED STATES
DEPARTMENT OF THE INTERIOR
Bureau of Land Management
Washington 25, D. C.

ORDER NO. 635 March 29, 1957

Subject: Clackamas-Molalla Master Unit for Revested Oregon and California Railroad Grant lands in Oregon

Pursuant to the authority contained in Section 1 of the Act of August 28, 1937 (50 Stat. 874), and in Order No. 2583, Amendment No. 12, September 17, 1954, of the Secretary of the Interior it is hereby ordered as follows:

1. The boundaries of the Clackamas-Molalla Master Unit established by Order No. 2387, November 29, 1947, are redefined to read as follows:

> Beginning at the NE corner of Sec. 1, T. 1 S., R. 5 E., W.M., Oregon, thence west 9 miles; south 9 miles; west 9 miles; south 9 miles to the SE corner Sec. 36, T. 3 S., R. 2 E.; west 6 miles; south 15 miles to the SW corner Sec. 18, T. 6 S., R. 2 E.; east 4 miles; thence following line of legal subdivision; southerly 9 miles; easterly 7 miles to Sec. 1, T. 8 S., R. 3 E.; southerly 3 miles; northeasterly 8 miles to the NE corner Sec. 1, T. 8 S., R. 4 E.; thence north 6 miles; east 6 miles; north 6 miles; east 4 miles; north 6 miles; east 2 miles to SE corner T. 4 S., R. 6 E.; north 6 miles; east 1 mile; north 12 miles; to the NE corner Sec. 5, T. 2 S., R. 7 E.; west 7 miles; north 6 miles to the place of beginning, as shown in detail on the map entitled "Map of Western Oregon, showing O. & C. Lands," dated September 18, 1947, on file in the Bureau of Land Management, Department of the Interior, Washington, D. C., Portland, Salem, Eugene, Roseburg, Coos Bay, and Medford, Oregon.

2. This order supersedes Order 2387 of the Secretary of the Interior, dated November 29, 1947.

/s/ Edward Woozley
Director

Bureau Order Distribution List

55 B

UNITED STATES
DEPARTMENT OF THE INTERIOR
Bureau of Land Management
Washington 25, D. C.

ORDER NO. 636 March 29, 1957

Subject: Santiam River Master Unit for Revested Oregon and California Railroad Grant lands in Oregon

Pursuant to the authority contained in Section 1 of the Act of August 28, 1937 (50 Stat. 874) and in Order No. 2583, Amendment No. 12, September 17, 1954, of the Secretary of the Interior it is hereby ordered as follows:

1. The boundaries of the Santiam Master Unit established by Order No. 2389, November 29, 1947, are redefined to read as follows:

> Beginning at the SW corner Sec. 18, T. 6 S., R. 2 E., W.M., Oregon, thence along lines of legal subdivision east 4 miles; southerly 9 miles; easterly 8 miles to Sec. 1, T. 8 S., R. 3 E.; southerly 3 miles; easterly 3 miles to Sec. 17, T. 8 S., R. 4 E.; southerly 28 miles to the SE corner Sec. 36, T. 12 S., R. 3 E.; west 24 miles to the SW corner of T. 12 S., R. 1 W.; northerly 24 miles to the NW corner T. 9 S., R. 1 W.; east 6 miles; north 12 miles to the NW corner of T. 7 S., R. 1 E.; east 3 miles; north 4 miles; east 3 miles; south 1 mile to the place of beginning, as shown in detail on the map entitled "Map of Western Oregon, showing O. & C. Lands," dated September 18, 1947, on file in the Bureau of Land Management, Department of the Interior, Washington, D. C., Portland, Salem, Eugene, Roseburg, Coos Bay, and Medford, Oregon.

2. This order supersedes Order No. 2389 of the Secretary of the Interior, dated November 29, 1947.

/s/ Edward Woozley
Director

Bureau Order distribution list

55 B

UNITED STATES
DEPARTMENT OF THE INTERIOR
Bureau of Land Management
Washington 25, D. C.

ORDER NO. 637 March 29, 1957

Subject: Upper Willamette Master Unit for Revested Oregon and California Railroad Grant Lands in Oregon

Pursuant to the authority contained in Section 1 of the Act of August 28, 1937 (50 Stat. 874) and in Order No. 2583, Amendment No. 12, September 17, 1954, of the Secretary of the Interior it is hereby ordered as follows:

1. The boundaries of the Upper Willamette Master Unit established by Order No. 2390, November 29, 1947, are redefined to read as follows:

> Beginning at the NE corner Sec. 6, T. 14 S., R. 3 E., W.M., Oregon, thence along lines of legal subdivisions as follows: west 36 miles to the Willamette River; southerly along said river to the southern boundary of Sec. 12, T. 18 S., R. 3 W.; southerly along coast fork of Willamette River to the east boundary of Sec. 28, T. 20 S., R. 3 W.; south 4 miles to ¼ corner between secs. 15 and 16, T. 21 S., R. 3 W.; southwesterly 9 miles to the north ¼ corner Sec. 35, T. 21 S., R. 4 W.; southerly 13 miles to the SW corner Sec. 36, T. 23 S., R. 4 W.; easterly 24 miles along Willamette-Umpqua divide to Sec. 5, T. 24 S., R. 1 E.; northeasterly 7 miles; easterly 12 miles to grant limit at the SE corner Sec. 32, T. 22 S., R. 3 E.; north 12 miles; east 4 miles; north 18 miles; west 2 miles; north 13 miles; west 3 miles; north 11 miles to the place of beginning, as shown in detail on the map entitled "Map of Western Oregon, showing O. & C. Lands," dated September 18, 1947, on file in the Bureau of Land Management, Department of the Interior, Washington, D. C., Portland, Salem, Eugene, Roseburg, Coos Bay, and Medford, Oregon.

2. This Order supersedes Order No. 2390 of the Secretary of the Interior, dated November 29, 1947.

/s/ Edward Woozley
Director

14829
Bureau Order distribution list

UNITED STATES
DEPARTMENT OF THE INTERIOR
Bureau of Land Management
Washington 25, D. C.

April 4, 1957

ORDER NO. 638

Subject: Delegation of authority to conduct hearings arising under the Mining Claims Rights Restoration Act of 1955.

1. Pursuant to Section 1.5 of Secretarial Order No. 2583, as amended February 16, 1954 (19 F.R. 1321), Hearing Examiners of the Bureau of Land Management are hereby designated to conduct hearings ordered pursuant to Section 2(k) of the above-cited Act (30 U.S.C. 621; 69 Stat. 681).

2. Hearing Examiners shall conduct such hearings arising in the State or States in which they are assigned to conduct hearings in other public land matters.

3. Following each such hearing, the Hearing Examiner shall render a decision, as provided by the Act herein cited, and serve a copy thereof on each party to the proceeding, including the agency of the Federal Government which was a party thereto.

4. Order No. 606 (21 F. R. 677) is hereby revoked.

Certified to be a true copy
of the original

Director

Certifying Officer

Distribution:

Bureau Order List

EFGraham:dm
1/11/57

April 4, 1957

April 4, 1957

ORDER NO. 6[illegible]

SUBJECT: Delegation of authority to conduct hearings arising under the Mining Claims Rights Restoration Act of 1955.

1. Pursuant to Section 1.5 of Secretarial Order No. 2583, [illegible]

2. Hearings Examiners shall conduct such hearings arising [illegible] State or States in which they are assigned to conduct hearings [illegible]

3. Following each such hearing, the Hearings Examiner shall [illegible]

4. Order No. 606 (2) F. R. 0771 is hereby revoked.

/s/ Edward Woozley

Director

1400-291

5.02

UNITED STATES
DEPARTMENT OF THE INTERIOR
Bureau of Land Management
Washington

April 4, 1957

ORDER NO. 639

SUBJECT: Establishment of Visitors' Register

Effective May 1, 1957, each Area, State and District Office will maintain an official register of visits to such offices by any Bureau employee, both Washington and field. In the latter case, this will include visits for any purpose by Area personnel to State and District Offices, and vice versa.

The register should be kept in a regular loose-leaf notebook, and should show the name of the visitor, his home office, the dates of arrival and departure, and the purpose of his visit. Each office head should designate the responsibility for maintaining the Visitors' Register to an employee on his immediate staff.

Reports will be requested from time to time as to the number of visits to the various offices, and a review of the register will be made in connection with our regular inspection program.

/s/ Edward Woozley
Director

Bureau Order Distribution

1400-291

[illegible]
DEPARTMENT OF THE INTERIOR
Bureau of Land Management
Washington 25, D. C.

April 11, 1957

ORDER NO. 639, Amendment No. 1

Subject: Establishment of Visitors' Register

Bureau Order No. 639 is amended to add the following paragraph:

"The registers is permanent material and may be disposed of five years after the close of the year involved."

Associate Director

Bureau Order Distribution

UNITED STATES
DEPARTMENT OF THE INTERIOR
Bureau of Land Management
Washington 25, D. C.

5.02

April 26, 1957

Superseded by 675

ORDER NO. 640

Subject: Redelegation of Authority - Incentive Awards Program

Effective June 1, 1957 the following authority is redelegated to each Area Incentive Awards Committee:

1. SUPERIOR PERFORMANCE AWARDS. Area Incentive Awards Committees are authorized to grant Superior Performance Awards where the amount of the award does not exceed $200.00.

2. OUTSTANDING PERFORMANCE RATINGS. Area Incentive Awards Committees are authorized to take final action on Outstanding Performance Ratings, EXCEPT those which by existing instructions require review of the Director.

3. SUGGESTIONS. Area Incentive Awards Committees are authorized to grant cash awards not to exceed $200.00 where a suggestion applies solely to the Area involved. If the amount of the award exceeds $200.00 the suggestions should be forwarded to the Bureau Incentive Awards Committee for appropriate action. The Area Committees are authorized to take adverse action on any suggestion found not feasible of adoption.

Suggestions found feasible of adoption and involving Bureau-wise operations shall be forwarded to the Bureau Incentive Awards Committee with appropriate recommendation, including the amount of the award.

4. LENGTH OF SERVICE AWARDS. Area Incentive Awards Committees are authorized to approve length of service awards. Ten years of total Government service entitles employees to receive special lapel emblems. At intervals of 10 years thereafter up to and including 30 years similar recognition will be given by issuing lapel emblems signifying the period. Area personnel offices will maintain necessary records and provide lists of employees eligible to receive length of service emblems to Incentive Award Committees.

PROCEDURES

1. DOCKETING. Pursuant to section 9(a), Part II of the Incentive Awards Handbook, each suggestion and superior performance recommendation will be docketed on the form indicated therein. Three copies of each docket card shall be forwarded to the Bureau Incentive Awards Committee at the end of each month.

2. NUMBERING. (a) Each suggestion shall be numbered pursuant to Section 9[illegible], Part II of the Handbook as follows:

Area 1 suggestions - BLM-1-57-1
Area 2 suggestions - BLM-2-57-1
etc.

(b) Incentive performance recommendations shall be numbered as follows:

Area 1 SP-1-57-1
Area 2 SP-2-57-1

3. ACTION BY AREA COMMITTEE. The procedure outlined in Section [illegible], Part II of the Incentive Awards Handbook shall be followed by Area Committees in adopting or rejecting suggestions. Copies of all such letters shall be forwarded to the Bureau Incentive Awards Committee.

4. REPORTS. Each Area Committee shall submit quarterly reports to the Director on a fiscal year basis within five days after the closing period, on the form prescribed by Section 1[illegible], Part II of the Incentive Awards Handbook. These reports shall be consolidated into quarterly Bureau reports by the Bureau Incentive Awards Committee and submitted to the Secretary's Office within 15 days after the closing period.

5. CONSULTATION OF EMPLOYEES. While the installation of suggestion boxes through regular supervisory channels is encouraged, nothing in this order is intended to prevent the installation of suggestion boxes direct to the Bureau Incentive Awards Committee.

/s/ Earl J. Thomas
Acting Director

Bureau Order Distribution List

UNITED STATES
DEPARTMENT OF THE INTERIOR
Bureau of Land Management
Washington 25, D. C.

In reply refer to:
6.02d-1

July 27, 1962

ORDER NO. 641, Amendment No. 1

Subject: Designation of Certifying Officers

Julian V. Cox, W. Earl Thomas, and Oscar E. Collins of the Division of Field Services are hereby designated as certifying officers in connection with the certification of copies and exemplifications of patents, plats, and other documents.

/s/ Karl S. Landstrom
Director

Bureau Order Distribution List
Branch of Organization and Management - 5 copies

UNITED STATES
DEPARTMENT OF THE INTERIOR
Bureau of Land Management
Washington, D. C.

May 13, 1957

ORDER No. 641

Subject: Designation of Certifying Officers

Julian V. Cox, Oscar E. Collins and Bernard F. Darnall of the Branch of Fiscal Service are hereby designated as Certifying Officers in connection with the disbursement of [illegible] transfers of personal funds and other [illegible].

Bureau Order No. 594 of August 8, 1955 is hereby revoked.

/s/ Edward Woozley

Director

UNITED STATES
DEPARTMENT OF THE INTERIOR
Bureau of Land Management
Washington 25, D. C.

ORDER NO. 642 June 26, 1957

Subject: Delegation of authority - Real estate leases in Anchorage and Juneau, Alaska

1. Pursuant to the authority delegated to me by the Secretary of the Interior on June 21, 1957, the Area Administrator of the Bureau of Land Management for Area 4, Juneau, Alaska, is authorized to exercise the authority delegated by the Administrator of General Services (22 F. R. 3474) to the Secretary of the Interior to acquire space by lease on such terms and for such periods not in excess of three years as is in the public interest for the housing of any component of the Bureau of Land Management in Anchorage and Juneau, Alaska, and to execute any leases, documents or instruments which may be necessary in connection therewith.

2. Any lease executed pursuant to the authority hereby delegated may be amended or renewed from time to time, provided that no renewal for a term in excess of one year shall be entered into without the prior written approval of the Administrator of General Services.

3. Authority conferred by or pursuant to this delegation shall be exercised in accordance with the Federal Property and Administrative Services Act of 1949 (63 Stat. 377), as amended, Section 3 of the act of August 27, 1935 (40 U. S. C. 304c), as amended, all other applicable laws and regulations issued pursuant thereto.

4. The Area Administrator may, in writing, redelegate the authority conferred herein. Any such redelegation shall be published in the Federal Register.

5. This delegation of authority shall continue until September 1, 1957, provided that any lease executed prior to that date may be amended or renewed as authorized by Paragraph 2, above, at any time during the term or any extension thereof.

/s/ Earl J. Thomas
Acting Director

Bureau Order Distribution List

Published FR
Vol. 22 4674

UNITED STATES
DEPARTMENT OF THE INTERIOR
Bureau of Land Management
Washington

June 26, 1957

ORDER NO. 642

Subject: Delegation of authority - Real estate leases in Anchorage and Juneau, Alaska

1. Pursuant to the authority delegated to me by the Secretary of the Interior on June 21, 1957, the Area Administrator of the Bureau of Land Management for Area 4, Juneau, Alaska, is authorized to exercise the authority delegated by the Administrator of General Services (22 F. R. 3474) to the Secretary of the Interior to acquire space by lease on such terms and for such periods not in excess of three years as is in the public interest for the housing of any component of the Bureau of Land Management in Anchorage and Juneau, Alaska, and to execute any leases, documents or instruments which may be necessary in connection therewith.

2. Any lease executed pursuant to the authority hereby delegated may be amended or renewed from time to time, provided that no renewal for a term in excess of one year shall be entered into without the prior written approval of the Administrator of General Services.

3. Authority conferred by or pursuant to this delegation shall be exercised in accordance with the Federal Property and

UNITED STATES
DEPARTMENT OF THE INTERIOR
Bureau of Land Management
Washington

June 22, 1977

Order No. 640

Subject: Delegation of authority - Coal mineral leases in Indemnity and Lemon, Idaho

1. Pursuant to the authority delegated to me by the Secretary of the Interior on June 22, 1977, the Acting Administrator of the Bureau of Land Management for Lemon, Idaho, is authorized to exercise the authority delegated by the Administrator of General Services (41 F. R. 3004) to the Secretary of the Interior to negotiate by lease on such terms and for such periods not in excess of thirty years as is in the public interest for the benefit of any component of the Bureau of Land Management in Indemnity and Lemon, Idaho, and to execute any leases, documents or instruments which may be necessary to consummate transfers.

2. Any lease executed pursuant to the authority hereby delegated may be amended or renewed from time to time, provided that no renewal for a term in excess of one year shall be entered into without the prior written approval of the Administrator of General Services.

3. Authority conferred by my predecessor in this delegation shall be exercised in accordance with the Federal Property and

Administrative Services Act of 1949 (63 Stat. 377), as amended, Section 3 of the act of August 27, 1935 (40 U. S. C. 303c), as amended, all other applicable laws and regulations issued pursuant thereto.

4. The Area Administrator may, in writing, redelegate the authority conferred herein. Any such redelegation shall be published in the Federal Register.

5. This delegation of authority shall continue until September 1, 1957, provided that any lease executed prior to that date may be amended or renewed as authorized by Paragraph 2, above, at any time during the term or any extension thereof.

Earl J. Stone
Acting
Director

UNITED STATES
DEPARTMENT OF THE INTERIOR
Bureau of Land Management
Washington 25, D. C.

May 29, 1961

BUREAU ORDER NO. 643, Amendment No. 2

Subject: Establishment of Case Checkout System

Paragraph No. 1 of Bureau Order No. 643 is amended by adding the following:

1. * * * * A separate request form (4-1348) is required for each case record. The request form will be filed with the case record involved.

E. R. Hochmuth
Associate Director

BUREAU ORDER DISTRIBUTION

C
O
P
Y

UNITED STATES
DEPARTMENT OF THE INTERIOR
BUREAU OF LAND MANAGEMENT
Washington 25, D.C.

October 16, 1957

ORDER NO. 643 Amendment No. 1

Subject: Establishment of Case Check-Out System

Paragraphs Nos. 1 and 3 of Bureau Order 643 are amended to read as follows:

1. Land Office case records will be made available for examination only upon written request showing serial number, requester's name and his interest in the case. Bureau Form 4-1348 will be used for this purpose. The Land Office Managers may delegate the authority to approve requests for examination of case records to any employee of the Land Office.

3. Papers and documents in cases filed prior to August 1, 1957 will be numbered when such cases are requested for examination. However, when the file is under visual surveillance the numbering may be temporarily dispensed with if it will cause a delay in making the case record available for inspection.

/s/ Edward Woozley
Director

Distribution

Bureau Order List

C
O
P
Y

UNITED STATES
DEPARTMENT OF THE INTERIOR
BUREAU OF LAND MANAGEMENT
Washington 25, D.C.

ORDER NO. 643 June 27, 1957

Subject: Establishment of Case Check-out System

For quite some time we have been greatly concerned with the problem of maintaining the integrity of our official records when such records are made available for inspection by applicants, lessees, assignees or authorized agents. Much comment has been received as to the manner in which the records are handled and the lack of surveillance during the time they are checked out. I have also noted the lack of orderly filing of the various documents within the case folder.

In order to overcome these problems a rigid case file check-out system will be initiated August 1, 1957 as follows:

1. Case records will be made available for examination only upon written request showing serial number, requester's name and his interest in the case. Bureau form 4-1348 will be used for this purpose.

2. All documents for new cases filed subsequent to August 1, 1957 will be numbered consecutively. The numbering shall begin with Number 1 and continue so far as possible in the order of receipt. The number shall be placed in the lower right-hand corner. State Supervisors should take prompt steps to secure readily adjustable numbering machines for this purpose. So far as possible documents must be filed in order of receipt and remain in that order except for those documents which are for administrative use only.

3. Papers and documents in cases filed prior to August 1, 1957 will be numbered when such cases are requested for examination. State Supervisors are requested to take such steps as are necessary to prevent any undue delays in preparing cases for examination.

4. State Supervisors will designate necessary employees within the Docket System to maintain constant surveillance over the case files during the time they are checked out for examination. The designated employee must assure himself that all documents are accounted for when the case is returned.

/s/ Earl J. Thomas
Acting Director

Distribution
Bureau Order List

[illegible]

[illegible]

ORDER NO. 654 July 9, 1971

Subject: [illegible]

Sec. 1 Delegation of authority. Pursuant to the authority contained in Section 2 of Order No. 2767 of the acting Secretary of the Interior, the Area Administrators are authorized to make the certification with respect to long-distance telephone calls pursuant to 31 U. S. C. Sec. 680a.

Sec. 2 Redelegation Area Administrators may, in writing, redelegate the authority contained herein to any qualified employees in their respective areas.

/s/ Edward Woozley

Director

Distribution:
Bureau Order Distribution List

Revoked by BLM ~~1385.04D1~~ 1221.21B

UNITED STATES
DEPARTMENT OF THE INTERIOR
Bureau of Land Management
Washington 25, D. C.

JUL 24 1957

ORDER NO. 645

Subject: Delegation of authority to conduct hearings arising under the Act of August 13, 1954.

1. Pursuant to Section 1.5 of Secretarial Order No. 2583, as amended February 16, 1954 (19 F.R. 1021), Hearing Examiners of the Bureau of Land Management are hereby designated to schedule and conduct hearings as provided for in Section 7(a) of the above-cited Act (30 U.S.C. 521; 68 Stat. 708) and the regulations in 43 CFR, Part 186.

2. Hearing Examiners shall conduct such hearings in the State or States in which they are assigned to conduct hearings in other public land matters.

3. The procedures with respect to notice of such hearings and the conduct thereof, and in respect to decisions of Hearing Examiners and appeals therefrom, shall follow the regulations in 43 CFR, Part 221, relating to contests or protests affecting public lands of the United States.

Edward Woozley

Director

[Order No. 645]

HEARING EXAMINERS

DELEGATION OF AUTHORITY TO CONDUCT HEARINGS ARISING UNDER THE ACT OF AUGUST 13, 1954

JULY 24, 1957.

1. Pursuant to section 1.5 of Secretarial Order No. 2583, as amended February 16, 1954 (19 F. R. 1021), Hearing Examiners of the Bureau of Land Management are hereby designated to schedule and conduct hearings as provided for in section 7 (c) of the above-cited Act (30 U. S. C. 521; 68 Stat. 708) and the regulations in 43 CFR Part 186.

2. Hearing Examiners shall conduct such hearings in the State or States in which they are assigned to conduct hearings in other public land matters.

3. The procedures with respect to notice of such hearings and the conduct therof, and in respect to decisions of Hearing Examiners and appeals therefrom, shall follow the regulations in 43 CFR Part 221, relating to contests or protests affecting public lands of the United States.

EDWARD WOOZLEY,
Director.

[F. R. Doc. 57-6248; Filed, July 31, 1957; 8:48 a. m.]

July 24, 1957

[illegible]

[illegible]: Delegation of authority to conduct hearings arising under the Act of August 13, 1954.

1. Pursuant to Section 1.5 of Secretarial Order No. 2583 as amended February 16, 1954 (19 F.R. 1021), Hearing Examiners of the Bureau of Land Management are hereby delegated to conduct and render decisions on [illegible] in the commercial [illegible] (30 U.S.C. 521; 68 Stat. 708) and the regulations in 43 CFR, Part 186.

2. Hearing Examiners shall conduct such hearings in the State or States in which they are assigned to conduct hearings in other public land matters.

3. The procedures with respect to notice of such hearings and the conduct thereof, and in respect to [illegible] of Hearing Examiners and appeals therefrom, shall follow [illegible] in [illegible] (Part 221) [illegible] in [illegible] [illegible] [illegible] [illegible] [illegible] [illegible]

[illegible]

[illegible]

File

Bl. -106

Revoked 3/28/60

UNITED STATES
DEPARTMENT OF THE INTERIOR
Bureau of Land Management
Washington 25, D. C.

August 10, 1957

Order No. 646

Subject: Motor Vehicle Operator Program

In connection with the operation of the Motor Vehicle Operator Program required by Public Law 766, 83rd Congress, the following shall apply to the Washington and Eastern States Offices:

1. Successful completion of the Civil Service Commission road test is required of all operators and incidental operators of motor vehicles. However, in exceptional cases the Bureau Safety Officer is authorized to waive the road test for individuals who have passed a comparable road test.

2. Carl Feight, Branch of Administrative Services, [illegible] lead to conduct the required test and to requisition [illegible] Security of Driver Road Test Serv. sheets. Washington and Eastern States office employees not headquartered in Washington may be tested by qualified road test examiners in their localities.

3. The Eastern States Supervisor is authorized to issue operators and incidental operators permits to employees of the Eastern States Office. The Chief, Washington Personnel Section is authorized to issue such permits to Washington Office employees.

Distribution:

Area Administrators	5 copies each
Each BLM Field Office	1 copy each
Washington Staff Offices	1 " "
Eastern States Supervisor	5 copies

1213.3
1710

UNITED STATES
DEPARTMENT OF THE INTERIOR
Bureau of Land Management
Washington 25, D. C.

5.02

November 14, 1957

ORDER NO. 647, Amendment No. 1

Subject: District Forestry Office - Ukiah, California

The area of responsibility of the District Forestry Office at Ukiah, California, is amended to include the public land in Trinity County south and west of the Trinity National Forest.

/s/ Edward Woozley
Director

Bureau Order Distribution List

1213.3
1710

UNITED STATES
DEPARTMENT OF THE INTERIOR
Bureau of Land Management
Washington 25, D. C.

5.02

October 16, 1957

Order No. 647.

Subject: Establishment of District Forestry Office at Ukiah, California

Because of the expanded forestry and other land management programs in Northwestern California a District Forestry Office is hereby established at Ukiah, California. The office will handle all forestry and grazing matters and such other matters as may be designated by the State Supervisor.

The area of responsibility of the district will include the public lands in the counties of Del Norte, Humboldt, Mendocino, Lake, Colusa, Yolo, Sonoma, Napa, Marin, and Solano.

/s/ Edward Woozley
Director

Bureau Order Distribution List

UNITED STATES
DEPARTMENT OF THE INTERIOR
Bureau of Land Management
Washington, D. C.

September 23, 1957

Order No. 648

Subject: Establishment of Fee for Copies of New Land Records

Pursuant to the authority contained in 43 CFR 2.4a determination has been made that the fee for copies of the township status plats and related historical index sheets of the new land records now being installed in the land office at Salt Lake City, Utah shall be $2 per sheet. This fee includes certification when such is required.

Receipts from the sale of such copies shall be deposited in the same manner as other copy fees.

/s/ Edward Woozley
Director

Bureau Order Distribution

Revoked by order 518 and amendments

UNITED STATES
DEPARTMENT OF THE INTERIOR
Bureau of Land Management
Washington 25, D. C.

ORDER NO. 649

October 16, 1957

(See also BLM 6048 amendments re per diem)

Subject: Delegation of Authority - Travel

Sec. 1 Pursuant to Secretarial Order 2576, the authority to authorize or approve travel, transportation and related expenses in connection with attendance at meetings is redelegated to the Associate Director and Assistant Directors.

Sec. 2 Pursuant to Secretarial Orders 2617 and 2803, the authority to authorize or approve other travel, transporation and related expenses, advances and rates when otherwise allowable, except unlimited general travel (throughout the United States and Alaska), is redelegated to the following officers:

(a) The Assistant Director for Operations.

(b) Area Administrators and Area Administrative Officers (within their respective areas.) Except that these officers may not authorize or approve:

(1) The attendance of employees at meetings or conventions of members of societies or associations concerned with the work of the Bureau and;
(2) The travel of an Area Administrator

Sec. 3 Pursuant to Sec. 5 of Secretarial Order 2617 the authority delegated in Sec. 2 (b) of this order may be redelegated by the Area Administrators to the State Supervisors and District Managers within their respective areas.

Sec. 4 Bureau Order No. 518 and amendments thereto are hereby revoked in their entirety.

Edward Woozley
Director

Bureau Order Distribution List

25743

UNITED STATES
DEPARTMENT OF THE INTERIOR
Bureau of Land Management
Washington, D. C.

January 13, 1958

Subject: Establishment of District Grazing Office at Bridger, Montana

A district grazing office is hereby established at Bridger, Montana.

The area of responsibility of the District shall include the [illegible] Carbon Counties, Montana and all of Big Horn County, Montana, Except:

Tps. 6 and 7S., Rs. 38, 39, and 40 E.

Tps. 8 and 9S., Rs. 38, 39, 40, 41, 42, 43 and 44 E.

T. 10S., Rs. 38, 42 and 43 E.

/s/ Edward Woozley
Director

Bureau Order Distribution

UNITED STATES
DEPARTMENT OF THE INTERIOR
Bureau of Land Management
Washington, D. C.

January 17, 1958

[illegible] to all [illegible]

Recently you received Bureau Order No. 560 establishing a District Grazing Office at Bridger, Montana.

The correct Order number is 650 instead of 560. Please make the necessary correction on your copy.

Karl D. Thomas
Associate Director

Bureau Order Distribution List

UNITED STATES
DEPARTMENT OF THE INTERIOR
Bureau of Land Management
Washington 25, D.C.

5.02

January 17, 1958

ORDER NO. 651

SUBJECT: Change of Position Title to District Manager

All Bureau of Land Management personnel who are in charge of district grazing offices or district forestry offices and who were previously officially designated as range managers or district foresters shall henceforth be officially referred to as district managers.

All authorities vested in range managers and district foresters by previous Bureau of Land Management Orders and by the Bureau of Land Management Manual shall henceforth be vested in district managers for district grazing offices and for district forestry offices, respectively.

/S/ Edward Woozley
Director

DISTRIBUTION:
BLM Order List

UNITED STATES
DEPARTMENT OF THE INTERIOR
Bureau of Land Management
Washington 25, D. C.

JUL 1 1 1958

ORDER NO: 652

Subject: Receipt of applications in Land Offices

1. The purpose of this order is to prescribe standards and procedures for the receipt of applications in bureau land offices. It shall be effective immediately.

2. State Supervisors shall place at or near land office entrances a suitable receptacle in which applications may be deposited between the hours of 3 p.m. and evening closing and between morning opening and 10 a.m.

A. This afterhours depository shall be neatly constructed and identified by an attractive information sign explaining its use. Wording similar to the following should be used: "Applications and other documents may be deposited here between the hours of _____ and _____ p.m., and _____ and _____ a.m. They will be considered filed as of 10:00 a.m. on the date the office next opens and filing priorities among conflicting applications shall be established by public drawing."

B. It must be securely attached in full view of land office personnel and so constructed that applications deposited inside cannot be taken or removed by unauthorized persons.

C. It must be closed promptly at 10 a.m. and all applications removed. These may be date-time stamped at convenience, but all must show 10 a.m.

D. To avoid a last minute rush, land office personnel may remove applications from the depository during the entire period of non-public hours. These applications must receive a date-time stamp of exactly 10 a.m. of the appropriate workday.

3. Between the moment of the land office opening at 10 a.m. and the moment it closes at 3 p.m., applications delivered across the counter shall show the <u>exact</u> date and time of receipt.

A. When one person files several applications, stamp them in the order they are handed across the counter.

4. Henceforth, only the ORIGINAL RIBBON COPY of applications will be date-tmme stamped. If the applicant has not written "Original" on this copy, the land office receiving clerk shall do so. Care must

UNITED STATES
DEPARTMENT OF THE INTERIOR
Bureau of Land Management
Washington 25, D. C.

[illegible] 1959

CIRCULAR NO. 652

Subject: Receipt of applications in land offices

1. The purpose of this memo is to prescribe standards and procedures for the receipt of applications in bureau land offices. It shall be effective immediately.

2. State inspectors shall place at no more than eight centers a suitable receptacle in which applications may be deposited between the hours of 8 p.m. and evening closing and between morning opening and 12 n.m.

3. This alphabetic designation shall be boxed, numbered and identified by an attractive information sign explaining its use. Reading similar to the following should be used: "Applications and rules documents may be deposited here between the hours of ____ and ____ p.m., and ____ and ____ a.m. They will be considered filed as of noon p.m. on the day the office was open and filing priorities among multiple applications shall be established by public drawing.

4. It must be assumed attended in full view of land office personnel and so constructed that applicants depositing items in it have no reason to manipulate priorities.

5. It must be viewed periodically on 12 n.m. and all applications received. Those not the date-time stamped or tamperedness, but all must show 10 a.m.

6. To avoid a dull minute rush, land office personnel may remove applications from the depository during the entire period of non-public hours. Those applications must receive a date-time stamp of morning 12 n.m. of the depository opening.

7. Between the hours of the land office opening at 10 a.m. and the noonset in minutes at 3 p.m., applications delivered across the counter shall show the exact date and time of receipt.

8. When one person files several applications, stamp them in the order they are handed across the counter.

9. Immediately, only the initial minute count of applications with to date-time stamped. If the applicant has not written "Original" on this copy, the land office receiving clerk shall do so. Then mail

be exercised by all personnel to insure that this OFFICIAL FILE COPY is permanently retained with the serial file. Only carbon copies shall be routed to other offices or returned to an applicant (lessee, permittee, etc.).

5. The following additional instructions pertain to applications delivered through the mails, supplementing the general requirements of the above sections:

A. The State Supervisor shall arrange for regular mail service to the land office to the fullest possible extent. Deliveries or pickups by BLM employees should be at sufficiently frequent intervals to accord mail applicants a fair opportunity to comptte with non-mail applicants.

B. All mail delivered to the land office or to State Office central mail facilities by Post Office employees shall be date-time stamped with the actual delivery time.

C. Where a land office or state office employee picks up the mail at the Post Office or a Departmental mail center, one pickup shall be scheduled consistent with local Post Office procedures and working schedules on or before 10 a.m. Applications received in this mail shall have a 10 a.m. stamp placed on them. The State Supervisor shall set and publicly announce additional times during the day for the pickup and receipt of mail applications for land offices within his jurisdiction.

D. Applications received in State Office central mail facilities should be rapidly routed to the land office so they can be serialized without delay.

6. The provisions of this order shall be incorporated in the BLM Manual, Volume IV, Chapter 5.2. Such incorporation shall automatically revoke and replace this order.

Acting Director

Bureau Order Distribution

cc: BLM reading file
Mr. Miller
Perm. File
M.I. reading file

LTMiller/gd 7/11/58
rewrite

be accepted by all personnel to insure that the personnel file copy is permanently retained with the medical file. Only medical reports shall be issued to state offices or referred to an applicant (lawyer, physician, etc.).

5. The following additional instructions pertain to applicants delivered through the mails, supplementing the general requirements of the above paragraphs:

a. The State Supervisor shall provide for regular mail delivery to the land office in the instant possible manner. Petitioners or pleaders by mail requests should be at sufficiently frequent intervals to assure mail applicants a fair opportunity to compete with non-mail applicants.

b. All mail delivered to the land office or to Bureau offices must contain the filing requirements shall be date-time stamped with the exact delivery time.

c. Every a land office or state office employee picks up the mail in the post office or a commercial mail carrier, one public mail to indicate receipt were (and that file) presented and mailing envelope or at before 10 a.m. Applications received in this mail shall have a 10 a.m. stamp placed on them. The State Supervisor shall and personnel assigned additional time during the day for the public mail receipt if mail applications for land office within his jurisdiction.

d. Applications received in state office mailing envelope shall be stamped to reflect the time and date the land office envelope was opened and serialized without delay.

6. The procedures of this chapter shall be incorporated in the new manual, Volume 17, Chapter 5.2. Land Information shall maintain materials repeat and revision this chapter.

Acting Director

Bureau Land Management

cc: Mail Pending File
Mr. Meiner
Pers. File
Mail Pending File

Distribution Initial
Manual

1213.3
1710

UNITED STATES
DEPARTMENT OF THE INTERIOR
Bureau of Land Management
Washington 25, D. C.

September 2, 1959

ORDER NO. 653 Amendment No. 2

Subject: District Office Nomenclature

To clarify questions raised concerning identification of the district offices the following specific examples are cited for the guidance of all concerned:

1. District offices shall be referred to as "Worland District Office," "Canon City District Office," "Medford District Office," etc.

2. Where two grazing districts are administered by the same district office, such as C-1 and C-6 at Craig, Colorado, they shall be referred to as either "Colorado 1," "Colorado 6," "C-1," "C-6" or "Colorado Grazing District 1," "Colorado Grazing District 6". The office administering these two districts shall be referred to as "Craig District Office," as cited in Item 1 above.

3. Grazing district references in reports, correspondence, rosters, maps, decisions, and other such documents shall be as cited in Item 2 above.

4. Address envelope: District Manager
Bureau of Land Management
P. O. Box 591
Baker, Oregon

5. Address memoranda:

To: District Manager, Baker District Office

6. District office letterheads shall be as prescribed by Bureau Order No. 542:

UNITED STATES
DEPARTMENT OF THE INTERIOR
Bureau of Land Management
District Grazing Office
Cedar City, Utah

or

District Forestry Office
Missoula, Montana

7. The public lands coming under the administration of a district generally fall into natural geographic areas within which are lands of private ownership and lands administered by State and other Federal agencies. The district has responsibility in this area in working out use of forage and other resources with the interested parties. Such areas shall be known as "Management Areas."

Amendment No. 1 to this order remains in effect.

Acting Director

Bureau Order Distribution

1213.3
1710

UNITED STATES
DEPARTMENT OF THE INTERIOR
Bureau of Land Management
Washington 25, D. C.

February 27, 1959

ORDER NO. 653, Amendment No. 1

Subject: District Office Nomenclature

The grazing district administered from the district office at St. George, Utah, shall be referred to as the Arizona Strip Grazing District.

Bureau Order 653 is amended accordingly.

Earl F. Lyons
Associate Director

Bureau Order Distribution

1213.3
1710

UNITED STATES
DEPARTMENT OF THE INTERIOR
Bureau of Land Management
Washington 25, D. C.

November 13, 1958

ORDER NO. 653.

Subject: District Office Nomenclature

Effective immediately in reports and other correspondence, District Range and District Forestry Offices shall be referred to as "District Offices" preceded by the name of the city where located. For example, "Worland District Office." The use of other identification such as District number or historical name is discontinued.

The requirements of Bureau Order No. 542 regarding office [illegible] are not changed by this order.

Bureau Order No. 591 of July 14, 1955 is revoked.

Acting Director

Bureau Order Distribution

UNITED STATES
DEPARTMENT OF THE INTERIOR
Bureau of Land Management
Washington 25, D. C.

August 19, 1958

Memorandum

To: Area Administrator, Area 2

From: Associate Director

Subject: BLM Order 652 - Receipt of applications in Land Office

Pursuant to your memorandum of August 8, your interpretation of paragraphs 5B and 5C of this order is correct. For the benefit of the other offices to which this memorandum is being sent, we shall restate your interpretation.

Paragraph 5B means that when mail is delivered to the Land Office or State Office by Post Office Department employees between the hours of 10 a.m. and 3 p.m., it shall be date-time stamped with the actual delivery time, (i.e. 11:02, 12:53) all the mail in this delivery being considered simultaneously filed. If it is delivered by Post Office employees between 3 p.m. and 10 a.m. the following day, it will be date-time stamped as of 10 a.m. of that following day, being considered simultaneously filed with all other mail and all other applications deposited or received between 3 p.m. and 10 a.m.

Paragraph 5C applies only where Bureau personnel pick up mail, and means that once the State Supervisor has set and publicly announced additional times between 10 a.m. and 3 p.m. for mail pickup, the mail will be picked up and stamped as of that time, all mail in that pickup being considered simultaneously filed.

Associate Director

DISTRIBUTION:
Area 1, 3 and 4 - 1 ea.
State Supervisors - 1 ea.
BLM reading file - 1
Perm. File - 1
M. I. Office - 3

Original.
File book

UNITED STATES
DEPARTMENT OF THE INTERIOR
Bureau of Land Management
Washington 25, D. C.

March 2, 1959

ORDER NO. 654

Subject: Allotment and apportionment of funds

Received by 697

Pursuant to the authority contained in Part 245.1.6B of the Departmental Manual, the Assistant Director for Operations is delegated the authority for allotment and apportionment of funds to the Washington Office and to each Area Office. Within their respective areas, the Area Administrative Officers are delegated into some category as to funds allotted to their Areas. The designated officials shall make certain that allotments or subdivisions thereof are not made in excess of the amounts of approved base allotments.

The Budget and Finance Officers in the Washington and Area Offices and the Administrative Officers in the Anchorage and Fairbanks Operations Offices are delegated the responsibility for control of the obligations within the amounts allotted to their respective offices.

The designated officials shall make certain that:

(1) Obligations are not incurred or expenditures made unless funds therefor have been allotted, suballotted, or otherwise authorized.

(2) Obligations against allotments or suballotments involving reimbursements, credits, leases, etc., are incurred or as may be proved the amounts which will actually be realized.

(3) No obligation shall be incurred until the obligating document has been cleared with the official responsible for determining the availability of funds, unless other sound methods are in effect in the bureau or office to provide such assurance.

Director

Bureau Order Distribution
Mr. Welt - 10 copies

1213.3
1710

UNITED STATES
DEPARTMENT OF THE INTERIOR
Bureau of Land Management
Washington 25, D. C.

March 30, 1959

ORDER NO. 655

Subject: Functions of New Orleans Office

In addition to its existing responsibilities involving mineral leasing in the Outer Continental Shelf, the functions of the Bureau of Land Management Office at New Orleans, Louisiana, are expanded to include the management and disposal programs of the Bureau in the States of Alabama, Arkansas, Florida, Louisiana, and Mississippi.

/s/ Edward Woozley
Director

Bureau Order Distribution

UNITED STATES
DEPARTMENT OF THE INTERIOR
Bureau of Land Management
Washington 25, D. C.

1.05a

Revoked by BO 670

March 31, 1959

ORDER NO. 656

Subject: Establishment of Training Committee

1. Proposed Departmental regulations to implement the Government Employees Training Act and Executive Order 10800 require the establishment in each Bureau of a training committee of high level officials to advise on planning, development, and coordination of training required by the Bureau. The regulations will also provide that other training committees and subcommittees shall be organized as may be needed for effective planning and operation of training programs.

2. Pursuant thereto, there is hereby established, effective April 1, 1959, the Bureau of Land Management Training Committee which shall be composed of the following members:

Associate Director
Assistant Directors
Cadastral Engineering Staff Officer
Forestry Staff Officer
Lands Staff Officer
Minerals Staff Officer
Range Staff Officer
Personnel Officer
Training Officer

3. The Associate Director shall serve as Chairman of the Training Committee, shall call meetings and preside, and give general direction to the work of the Committee. He shall designate the membership of Area or State training committees and such subcommittees of the BLM Training Committee as may be desirable.

4. The Training Officer shall serve as secretary of the Committee and shall maintain liaison with the Chairman in respect to the execution of Committee plans, programs and accomplishments. He shall also be responsible for the preparation of periodic reports, not less than once each year on training needs and accomplishments. He shall maintain all records for inspection.

5. The Committee shall formulate a basic Bureau-wide policy on the training of employees, consistent with issuances of the Civil Service Commission and the Department; it shall determine training needs and methods and fix schedules for accomplishment. In so doing,

[illegible] shall review the recommendations of line and staff officers of the Bureau and shall give guidance and advice to those officials.

6. The Bureau training program shall include the following forms of training:

(a) orientation and induction training;
(b) supervisory and management training;
(c) technical, scientific and professional training;
(d) clerical and office training;
(e) trades and crafts training;
(f) safety, first-aid, and related training.

7. The Committee shall also formulate a basic Bureau policy in connection with attendance at outside meetings which are concerned with the functions or activities of the Bureau for which appropriations are made, or which will contribute to improve command, supervision, or management of these functions or activities. Records of attendance at outside meetings shall be maintained as directed by the Committee.

(Signed) [illegible]

Director

Bureau Order Distribution

E.

[illegible]

[illegible]

[illegible]

[illegible]

ORDER NO. 637 Superseded by BM Release 1-1 June 20, 1959

Subject: Designation of Tort Claims Officer.

Departmental Manual Chapter 451.2, Tort Claims Against the United States, sets forth the policies, responsibilities, and procedures to be followed in the handling of such claims within the Department of the Interior.

In accordance with Section 451.2.6 thereof the following employees are designated Tort Claims Officers with responsibilities within their respective areas and states. The Bureau Tort Claims Officer will function Bureau-wide and is responsible for implementing, coordinating and reviewing the activity as described in the Departmental Manual.

Bureau Tort Claims Officer - Budget & Finance Officer

Area Tort Claims Officer - Administrative Officer

State Tort Claims Officer - Administrative Officer
or Administrative Assistant

Operations Office Tort Claims Officer - Administrative Officer
(Anchorage & Juneau)

Director

Bureau Order Distribution

Nondiscr
Per 676

UNITED STATES
DEPARTMENT OF THE INTERIOR
BUREAU OF LAND MANAGEMENT
Washington 25, D. C.

August 26, 1959

ORDER NO. 658

SUBJECT: Nondiscriminatory Government Employment Policy in the Department of the Interior

This order supersedes and revokes Order No. 600, as amended, and is issued for the purpose of redesignating Employment Policy Officers of the Bureau by more specific titles and to inform all employees of the Department's policy on nondiscrimination in employment.

Executive Order No. 10590, dated January 18, 1955, sets forth the policy of the United States Government that equal opportunity be afforded all qualified persons consistent with law for employment in the Federal Government. This policy excludes and prohibits discrimination against any employee or applicant for employment in the Federal Government because of race, color, religion, or national origin and is limited to citizens of and person who owe allegiance to the United States. Regulations of the President's Committee provide that segregation on the basis of race, color, religion, or national origin is also within the scope of the nondiscrimination policy.

It is the policy of the Department and of the Bureau to carry out the letter and spirit of Executive Order 10590. The Department has issued procedural regulations for complying with the provisions of the Executive Order and the general regulations issued by the President's Committee on Government Employment Policy.

Mr. Otis D. Beasley, Administrative Assistant Secretary, Department of the Interior, Washington 25, D. C., has been designated as the Department Employment Policy Officer and Mr. W. Darlington Denit, Director of Inspection, in the office of the Administrative Assistant Secretary, has been designated as the Department Deputy Employment Policy Officer.

Mr. James P. Beirne, Assistant Director for Operations, Bureau of Land Management, Washington 25, D. C., has been designated as the Bureau Employment Policy Officer for all employees attached to the Washington and Eastern States Offices.

The following have been designated as Area Employment Policy Officer for their respective areas:

Mr. James F. Doyle, Area Administrator, Area 1, 1001 N. E. Lloyd Blvd., P.O. Box 3861, Portland 8, Oregon

Mr. Neal D. Nelson, Area Administrator, Area 2, 310 Boston Bldg., P.O. Box 659, Salt Lake City, Utah

Mr. W. B. Wallace, Area Administrator, Area 3, Federal Center Bldg. No. 50, Denver, Colorado

Mr. Jesse M. Honeywell, Area Administrator, Area 4, 238 Seward Street, P.O. Box 1481, Juneau, Alaska

It shall be the duty of Employment Policy Officers of the Bureau to receive and handle complaints from employees of the Bureau or any applicant for employment and to perform such other duties as may be prescribed in complying with the Department's regulations under Executive Order 10590. For purposes of this order, the grounds of admissible complaint are limited to alleged discriminatory administrative actions based on race, color, religion, or national origin, and not on merit and fitness.

Complaints may be filed with the Department Employment Policy Officer or his Deputy, the Bureau Employment Policy Officer, Area Employment Policy Officers, the President's Committee on Government Employment Policy, or the Civil Service Commission. Complaints may be filed with the Civil Service Commission only in connection with appeals filed by veteran preference employees. The Department's regulations which are posted in all Bureau offices describe the requirements as to time limit for filing and the form and substance of complaints which must be observed by complainants. Questions regarding these regulations should be addressed personally or in writing to the appropriate Employment Policy Officer of the Bureau.

A copy of this order shall be furnished to each employee who enters on duty in the Bureau.

A copy of this order shall be posted permanently along with the Department's regulations under Executive Order 10590 in all Bureau offices. Also a copy of this order shall be posted along with the regulations of the President's Committee on Bureau bulletin boards which are used to announce Federal examinations and job opportunities.

Earl D. Thomas
Acting Director

Distribution: Desk-to-desk

GPO 880875

Miller
3.02a

UNITED STATES
DEPARTMENT OF THE INTERIOR
Bureau of Land Management
Washington 25, D.C.

October 1, 1959

ORDER NO. 659

Subject: Designation of Records Liaison Officers (Washington)

Pursuant to BLM Manual, Vol. IV, Standard Administrative Matters, Part 132, Records Disposition, Chapter 132.1.4A, Washington Office Records Liaison Officers have been designated by their respective Staff officers, as listed herein. It is expected that each Records Liaison Officer will familiarize himself with the manual and disposal schedules and pursue an active records management program for his office.

Staff	Name
Forestry	Mr. Ronald A. Nelson
Cadastral Engineering	Mr. Franklin Van Zandt
Range Management	Mr. Leland Fallon
Lands	Miss Betty Alley
International Cooperation	Mrs. Dorothy Dempsey
Information	Mr. Dwight F. Rettie
Appeals	Mrs. Blanche Skinner
Hearing Examiners	Mrs. Anne Farr
Budget and Finance	Mr. George Snyder
Administrative Services	Mr. William Johnson
Eastern States Office	Mrs. Eva Miller
Field Services	Mr. Everett Eynon
Program Coordination	Miss Theresa A. Tims
Records Improvement Project	Mr. Gerald Fish
Minerals	Mrs. Irene Lewis
Management Improvement	Mrs. Pearl Morris
Personnel	Mrs. Flora Myers

Any changes in the personnel designated shall be submitted to the Records Management Officer (Management Improvement Office) in writing by the Staff Officer not later than 10 days after change occurs.

Director

DISTRIBUTION:

Washington Staff Officers - 2 each
Eastern States Office - 2 each.
Management Imp. - 5 copies

UNITED STATES
DEPARTMENT OF THE INTERIOR
Bureau of Land Management
Washington 25, D. C.

February 25, 1960

Memorandum To All Concerned

Recently you received Bureau Order No. 660, dated February 16, delegating authority to Area Administrator, Area 4 to negotiate a contract for personal or professional services.

The correct Order No. is 661 instead of 660. Please make the necessary correction on your copy.

/s/ Earl J. Thomas
Associate Director

Bureau Order Distribution List

1214.2
1510

UNITED STATES
DEPARTMENT OF THE INTERIOR
Bureau of Land Management
Washington 25, D. C.

December 15, 1959

BUREAU ORDER NO. 660

Subject: Delegation of Authority to Negotiate Contract for Personal or Professional Services

Section 1. Delegation. Pursuant to the authority contained in section 3 of Order No. 2844 of the Secretary of the Interior dated November 20, 1959, the Chief, Branch of Administrative Services is authorized subject to the provisions of section 2 of this order, to exercise the authority delegated by the Administrator of General Services to the Secretary of the Interior (24 F.R. 1921) to negotiate, without advertising, under section 302(c)(4) of the Federal Property and Administrative Services Act of 1949, as amended (41 U.S.C. 252 et seq.), a contract for professional engineering services for the stereotriangulation of about 95 models in 7 flights for determination of machine coordinates of about 1200 photoidentifiable points. The project is known as the Sheep Mountain Cadastral Survey Project, Group 89, Alaska.

Section 2. Exercise of authority. The authority delegated by section 1 of this order shall be exercised in accordance with the applicable limitations in the Federal Property and Administrative Services Act of 1949, as amended, and in accordance with applicable policies, procedures and controls prescribed by the General Services

Administration and the Department of the Interior. The authority delegated by this order does not include authority to make advance payments under section 305 of the act.

(signed) EDWARD WOOZLEY

Director

Bureau Order Distribution

1214.2
1510

UNITED STATES
DEPARTMENT OF THE INTERIOR
Bureau of Land Management
Washington 25, D. C.

February 18, 1960

BUREAU ORDER NO. 661

Subject: Delegation of Authority to Negotiate a Contract for Personal or Professional Services

Sec. 1 Delegation. Pursuant to the authority contained in section 3 of Order No. 2847 of the Secretary of the Interior dated January 22, 1960, the Area Administrator, Area 4 is authorized subject to the provisions of section 2 of this order, to exercise the authority delegated by the Administrator of General Services to the Secretary of the Interior (24 F. R. 1921) to negotiate, without advertising, under Section 302(c)(4) of the Federal Property and Administrative Services Act of 1949, as amended (41 U.S.C. 252 et seq.), a contract for architectural and engineering services for the design of preliminary plans, final plans, inspection of construction during process, and final inspection of a planned second story addition to the Parachute Loft and Equipment Building, Fire Control Station, Fairbanks, Alaska.

Sec. 2 Exercise of authority. The authority delegated by section 1 of this order shall be exercised in accordance with the applicable limitations in the Federal Property and Administrative Services Act of 1949, as amended, and in accordance with applicable policies, procedures and controls prescribed by the General Services Administration and the Department of the Interior. The authority delegated by this order does not include authority to make advance payments under section 305 of the act.

/s/ Edward Woozley
Director

Bureau Order Distribution

Administration and the Department of the Interior. The authority delegated by this order does not include authority to make advance payments under section 305 of the act.

/s/ Edward Woozley
Director

Bureau Order Distribution

misc.

Marked by b4

5.05b

DEPARTMENT OF THE INTERIOR
Bureau of Land Management
Washington 25, D. C.

ORDER NO. 662

February 23, 1960

Subject: Followup on audit findings

1. Purpose. The purpose of this order is to prescribe the responsibility for followup on audit findings and to outline certain procedures which are necessary to furnish this Office with the information required in connection with the audit findings.

2. Responsibility. It shall be the responsibility of the Budget and Finance Officer in Washington and the Budget and Finance Officer of each area office in cooperation with other staff officers, to carry out a vigorous program of followup on audit findings to ascertain that corrective action has been taken wherever required. This shall include audit findings from GAO, BLM internal audit and Area audits.

3. Procedures. The following procedures shall govern the followup action to be taken on audit findings:

a. Area Offices. Each Area Office is expected to ascertain within thirty days from receipt of the report that corrective action has been taken or will be taken in connection with the audit findings involving offices under their jurisdiction. At the end of this thirty-day period information shall be furnished, in duplicate, to the Director's Office outlining the corrective action which has been taken together with necessary references to each item in the audit report. In addition, there shall be indicated those findings which require additional followup by the Area Office Staff. This followup may be made and reported within a three-month period after the date of receipt of the report. Offices are reminded that changes in prescribed procedures or installation of new procedures recommended in audit findings are not to be made prior to clearance by the Director's Office.

b. Washington Office. The technical and administrative staffs of the Washington Office will from time to time make personal visits to the offices to assure that corrective action has been taken on certain audit findings in state and district offices and all audit findings on area offices. Whenever a personal visit has been made a report will be prepared referring to the audit in question and will state if the corrective action which has been taken is adequate or if further corrective action is required. The Budget and Finance Officer will be responsible for the coordination of these

[illegible], the preparation and submission of replies in accordance with Part 3[illegible] of the Departmental Manual and the maintenance of the files pertaining thereto.

GAO reports of findings to Area Administrators or equivalent officials shall be forwarded to the Director. Full information shall be furnished which will enable the Director's Office to prepare a reply to the GAO.

Copies of all audit reports and information on followup and corrective action taken shall be furnished the Bureau Inspection Office and shall be available for the use of all staff personnel.

(s) Edward Woozley

Director

Bureau Order Distribution

UNITED STATES
DEPARTMENT OF THE INTERIOR
Bureau of Land Management
Washington 25, D. C.

Revoked by 688

March 28, 1960

ORDER NO. 663

Subject: Delegation of Authority—Management, Transfer and Disposal of Real Property and Related Personal Property

Sec. 1 Delegation of Authority. Pursuant to the authority contained in section 4 of Order No. 2580 of September , 1958 of the Secretary of the Interior the Assistant Director for Operations, the Area Administrators, and the Chief, Branch of Administrative Services may exercise the authority reserved to us by section 3 of the Disposal Order with respect to the management, transfer and disposition of real property and related personal property.

Sec. 2 Exercise of Authority. The authority granted by this order shall be exercised in accordance with the provisions of the Federal Property and Administrative Services Act of 1949, as amended (40 U.S.C., Sec. 481 et seq.), the regulations of the General Services Administration, and the regulations of the Department of the Interior.

Sec. 3 Redelegation. The Area Administrators may in writing redelegate to any qualified employees of their areas the authority created by this order. Such redelegation will be published in the Federal Register.

Sec. 4 Revocation. Bureau Order No. 611 of June 17, 1954 is hereby revoked.

(S) Edward Woozley
Director

Bureau Order Distribution List

[illegible] Union
[illegible]
[illegible]
[illegible]

[illegible] [illegible], [illegible]

[illegible] Herebel by A. #1

Subject: Establishment of Preservation of Legal Records Committee

1. Recent correspondence from the Area Administrators and conference discussions in the Washington Field Offices indicate the need for establishment of a committee to specifically address the need for (1) preserving the existing paper records, (2) retirement of the current paper records, (3) [illegible] of the official record (microfilm), (4) [illegible] of the official record (microfilm) [illegible] (5) [illegible] of [illegible] [illegible], and records personnel in Area Teams and all Bureau offices.

2. A committee is to be formed as [illegible] of Legal Records Committee is established. The following [illegible] are assigned to serve on this committee:

[illegible]

3. The Terms of Reference of the committee will [illegible] and [illegible] of meetings. [illegible] give general direction to the work of the committee. The results to be accomplished by the committee [illegible] the committee shall formulate a preliminary report [illegible] the method of records for accomplishment of these objectives. [illegible] along it will consider and evaluate [illegible] interactive (field and field headquarters). The [illegible] Team shall be assembled [illegible] of Data.

[illegible]

[illegible]

1400-790.9
5.05a

UNITED STATES
DEPARTMENT OF THE INTERIOR
BUREAU OF LAND MANAGEMENT
Washington 25, D. C.

September 22, 1960

Order No. 665, Amendment No. 1

Subject: Use of fire extinguishers in motor vehicles

Paragraph 2 of Bureau Order No. 665, dated June 23, 1960, is amended to read as follows:

2. Fire extinguishers to be carried in vehicles shall be approved by Underwriters Laboratories and may be either of the dry chemical or carbon dioxide type. Dry chemical extinguishers of not less than two pounds capacity or carbon dioxide extinguishers of similar or larger capacity may be optionally used.

Earl H. Thomas
Acting Director

BUREAU DISTRIBUTION LIST

UNITED STATES
DEPARTMENT OF THE INTERIOR
Bureau of Land Management
Washington, D. C., 20240

In reply refer to:
1459.9 (713)

RECEIVED
COLORADO LAND OFFICE
DENVER, COLORADO
JUN 23 1965
10 00 0

RECEIVED
Bureau of Land Management
State Director
JUN 23 1965

DEPARTMENT OF THE INTERIOR
BUREAU OF LAND MANAGEMENT

June 16, 1965

Instruction Memo No. 65-281
Expires: 12/31/65

To: All Field Officials

From: Associate Director

Subject: Portable Fire Extinguishers in Bureau Motor Vehicles - Rescinding of Bureau Order No. 665, with Amendment No. 1

Motor vehicle fire loss studies by both the Department and the Bureau show that the cost of portable fire extinguishers does not appear to warrant their use in most motor vehicles. If fire extinguishers were not installed in BLM motor vehicles, the annual savings have been estimated at $3,200.

Bureau Order No. 665, as amended on September 23, 1960, is therefore rescinded. The following shall apply in the use of fire extinguishers in Bureau motor vehicles:

1. Fire extinguishers shall not be required in passenger cars; station wagons; carryalls; suburbans; jeeps; dump trucks; and light trucks (pickups, panel wagons, etc.) to 1-1/2 tons.

2. Fire extinguishers shall be required in buses; ambulances; portable kitchens; truck-tractors or other heavy vehicles pulling trailers or carrying valuable, flammable, or explosive cargo; emergency vehicles on fire suppression operations, search and rescue missions, radio-servicing, or when used in remote or isolated areas; and public service vehicles involving visitor protection in recreation areas, camping spots, etc.

H. R. Hochmuth

DISTRIBUTION:
IA - 15
D&RM - 5
Dept. Safety Officer (Rm. 6244)
Dir. of Mgt. Operations (Rm. 6200)
713 - 10 plus surplus

1400-790.9

5.05a

UNITED STATES
DEPARTMENT OF THE INTERIOR
BUREAU OF LAND MANAGEMENT
Washington 25, D. C.

June 23, 1960

Order No. 665

Subject: Use of fire extinguishers in motor vehicles

Pending the issuance of a departmental policy statement applicable to all Bureaus regarding the carrying of fire extinguishers in motor vehicles, the following shall apply throughout this Bureau:

1. Effective immediately, a fire extinguisher shall be carried in all Bureau motor vehicles.

2. Fire extinguishers to be carried in vehicles shall be approved by Underwriters Laboratories and may be either of the dry chemical or carbon dioxide type. Dry chemical extinguishers of not less than two and a half pounds capacity or carbon dioxide extinguishers of similar or larger capacity may be optionally used.

3. As soon as exhausted, all carbon tetrachloride or other vaporizing liquid-type extinguishers shall be removed from service in Bureau vehicles. No further purchases of such extinguishers shall be made.

/s/ Earl J. Thomas

Acting Director

BUREAU DISTRIBUTION LIST

[illegible]

[illegible]

[illegible]

Subject: [illegible] of Preservation of Survey [illegible] Committee

Order No. 604 which established the Preservation of Survey [illegible] Committee is hereby revoked.

Associate Director

[illegible] ORDER DISTRIBUTION LIST

In Reply Refer To:
6.02e

UNITED STATES
DEPARTMENT OF THE INTERIOR
BUREAU OF LAND MANAGEMENT
Washington 25, D. C.

June 16, 1961

Bureau Order No. 666, Amendment No. 1

Subject: Installation and use of motor vehicle safety seat belts

Add to paragraph 1. the following:

"except vehicles without rigid tops".

Change paragraph 3. to read:

"At the option of the State Director, seat belts may be installed in vehicles of more than one-ton capacity."

The following shall be added after paragraph 6.:

Seat belts shall be installed on GSA vehicles used by the Bureau as provided below:

1. BLM shall request installation and agree to pay the cost thereof, including installation and removal costs as provided in GSA FSS 5630.7A, dated January 26, 1961.

2. The presence of seat belts in vehicles will not limit or restrict their rotation.

3. The cost of purchase and installation of seat belts added to the acquisition cost of passenger-carrying vehicles in which belts are to be installed will not exceed the statutory price limitation for the type of vehicle involved.

4. Requirements of paragraphs 3, 5, 6 under installation and use of seat belts in Bureau vehicles (above) shall be complied with.

E. R. Hochmuth

Acting Director

Bureau Order Distribution List

UNITED STATES
DEPARTMENT OF THE INTERIOR
Bureau of Land Management
Washington 25, D. C.

November 23, 1960

Order No. 666. Sup. by BLM 1459.91 E7d (6/19/6

Subject: Installation and use of motor vehicle safety seat belts

The value of safety seat belts in preventing death and serious injury in motor vehicle accidents has been thoroughly demonstrated. The American Medical Association, United States Public Health Service, and National and Federal Safety Councils all endorse the use of such belts. In addition to humanitarian considerations, the use of seat belts can result in a considerable financial saving because of reduction in number and seriousness of injuries.

Therefore, effective immediately, seat belts will be installed and used in Bureau motor vehicles as specified below:

1. Two seat belts shall be installed in all trucks, including all four-wheel-drive vehicles, of one-ton capacity or less.

2. Where possible to do so within statutory limitations, two seat belts shall be installed in the front seat of each sedan and station wagon. Rear seat installations shall also be made where rear seats are often used in normal vehicle operation.

   To determine whether belts can be installed within the statutory limitation, the cost of each vehicle must be compared to the statutory limitation <u>in effect at the time of purchase</u>.

   The purchase price of a vahicle includes the Federal Excise Tax, but the statutory limitation does not include the cost of transportation. In addition, the Comptroller Decision No. A92040, dated February 14, 1938, rules that "the statute clearly includes in the price limitation the cost of the vehicle as well as all equipment and accessories, standard or otherwise, intended for use, regardless of whether for comfort, safety, or other purposes..."

Based on the above, if the statutory limitation at the time of purchase is $1,350 and the purchase price, including Federal Excise Tax is $1,300, additional equipment or accessories added to the vehicle at any time may not exceed $50.

3. At the option of the Area Administrator, seat belts may be installed in vehicles of more than one-ton capacity.

4. Requests to GSA to purchase new equipment under the Federal Standard shall include seat belts, as indicated above, as an option necessary for the satisfactory operation of the vehicle.

5. All seat belts shall be purchased from the contract awarded under Federal Supply Schedule, Group 25, Vehicular Equipment Components. This contract meets Federal Specification No. JJ-B-185a, dated January 19, 1960.

   All installations shall be made in accordance with Federal Standard No. 119a, dated January 19, 1960.

6. When available, seat belts shall be worn at all times by motor vehicle operators and passengers without regard to the distance to be travelled or the time involved.

/s/ Edward Woozley
Director

Bureau Distribution List

Mr Miller

File

1. The operational responsibilities listed for the Cadastral Engineering Staff Officer will be assumed by the Chief, Division of Field Services.

   Except for the responsibilities in Item No. 3, of Phase I, the responsibilities assigned to the former Area Administrators will be assumed by the State Directors.

3. The responsibility listed in Item 3 of Phase I will be assumed by the Chief, Division of Field Services.

4. Authorizations for increased staffing as a result of the activities required by this order shall be approved in the usual manner.

Associate Director

UNITED STATES
DEPARTMENT OF THE INTERIOR
Bureau of Land Management
Washington 25, D. C.

December 9, 1960

ORDER NO. 667 Amendment #1

Subject: Survey Records Improvement Project

Effective immediately the Cadastral Engineering Staff Officer is charged with the responsibility of establishing and operating a special project for the preservation of cadastral and mineral survey plats and survey field notes. All such records in the [illegible] of the Bureau of Land Management [illegible] offices [illegible] the Bureau are included.

Due to the illegibility of some plats and the rapid deterioration of many more it is urgent that immediate steps be taken to inaugurate this project. Financing will be approximately 50% activity [illegible] Cadastral Engineering [illegible] funds [illegible]

The June 1960 committee report titled "Report on Survey Records Preservation" will be used as the basis for establishment and operation of the project. With few exceptions the committee's recommendations are accepted. The exceptions have been deleted from the report [illegible] Area Administrator and State Supervisor.

All Area and State office organizations shall actively participate with the Cadastral Engineering staff office in the conduct of the project. It is expected that some additional personnel will be required, however, in the main all work will be performed by present staffs. Authorizations for increased staffing [illegible] through the Cadastral Engineering Staff Officer.

[illegible] in the [illegible] project [illegible] in two phases as described below. Phase I shall be started and placed in current work plans and financed within your present fund structure. Dependent upon future availability of funds, Phase I and Phase II shall be performed [illegible] and no later than June 30, 1965.

PHASE I

1. Cadastral Engineering Staff Officer - designate a Project Manager to formulate and carry forward the detailed plans and operations of the project.

   Area Administrator - procure 35 mm reader-printer equipment for use with microfilmed field notes in State offices.

3. Area Administrator - reproduce additional rolls of field note microfilm and prepare suitable index for State and Washington offices.

4. Cadastral Engineering Staff Officer - organize and procure equipment for microfilming of all cadastral and mineral plats. Filming to be done in Washington office.

5. Cadastral Engineering Staff Officer - film all duplicate original cadastral plats, mount in aperture cards and distribute to State offices.

6. Cadastral Engineering Staff Officer - arrange for systematic shipping of mineral plats to Washington office from State offices for filming, mounting in aperture cards and return.

PHASE II

7. State Office Cadastral Engineer - review cadastral plat aperture cards for detection and identification of illegible plats.

8. Area Administrator - arrange for restoration of illegible plats through re-drafting. Ship to Washington for production of new microfilm-aperture cards.

Any present and all future activity directed towards the preservation and improvement of cadastral and mineral survey plats and survey field notes shall be in strict accord with this plan. Modifications to any existing procedures shall be made where necessary to make them conform to this plan.

The Cadastral Engineering Staff Officer shall issue equipment specifications and approve all procurement of equipment for project use. He shall issue operating instructions and coordinate apportionment of funds to enable an early and continuous application of these plans.

/s/ Earl J. Thomas
Acting Director

Attachment

Bureau Order Distribution

Sec 678

February 2, 1961

[illegible]

Subject: Delegation of Authority in Connection with Appeals to the Director Bureau of Land Management

Section 1. [illegible] authority [illegible] subject to the [illegible] [illegible] Order No. [illegible] [illegible] [illegible] Appeals Officer of the Bureau of Land Management [illegible] [illegible] [illegible] appeals [illegible] [illegible] [illegible] [illegible] [illegible]

Section 2. Bureau Order No. 587 of April 12, 1955 is [illegible]

/s/ Karl Landstrom
Director

[illegible]

[illegible]
DEPARTMENT OF THE INTERIOR
Bureau of Land Management
Washington 25, D. C.

March 9, 1961

Circular No. 2[illegible]

Subject: Appraisal Review Boards

Bureau Order No. 6[illegible], dated February 8, 1957, which established Appraisal Review Boards is hereby revoked in its entirety.

/s/ H. R. Hochmuth
Associate Director

Bureau Order Distribution List

Superseded by FM 66-85
2-23-66

1232
1400-410

5.05a

UNITED STATES
DEPARTMENT OF THE INTERIOR
BUREAU OF LAND MANAGEMENT
Washington 25, D. C.

March 7, 1961

Order No. 670

Subject: Bureau Training Committee

All previous authorities for Bureau Training Committees are rescinded and superseded by the following:

1. Bureau Training Committee

(a) Purpose:

The Bureau Training Committee shall have responsibility for recommending training policy and programs to the Director. The Committee shall be responsible for reviewing training programs and for considering other training problems of Bureau-wide scope. It shall also recommend policy on attending meetings.

(b) Membership:

The Committee shall consist of an Assistant Director, who shall serve as chairman, and seven other members representative of management and the other functions of the Bureau. The members shall be appointed by the Director to serve 12-month terms or until July 1 of the year following the year in which appointed. Members may be reappointed for successive terms. Attendance at committee meetings may not be delegated by members, except in emergencies. The Employee Development Officer shall serve as secretary.

(c) Operating Procedure:

The Personnel Officer, the Training Officer, and the Employee Development Officer shall identify training needs and present training programs to the Committee for recommendations.

They shall also, through discussions with field and staff officers, determine the need for attendance at meetings and present to the Committee a plan to meet these needs.

The Personnel Officer, Training Officer, and Employee Development Officer shall not have a vote on the Committee but may take an active part in the discussions.

(d) Subcommittees:

The chairman of the Training Committee may establish three subcommittees which he deems necessary and shall designate the chairman and other members from the Committee. He shall furnish instructions under which each subcommittee is to operate and to report to the Committee. The secretary shall be the Training Officer or Employee Development Officer.

(e) Records:

Minutes of each meeting will be written by the secretary, signed by the chairman and the secretary, and submitted to the Director for approval. Approval by the Director will authorize appropriate action by management and the Training Officer.

(f) Visitors:

Nonmembers may attend meetings as visitors on invitation of the chairman. Visitors will not have a vote.

(g) Meetings:

Meetings will be called by the chairman. Usually, the Committee will meet once each month and at such other times as requested by the chairman. An agenda shall be prepared and distributed to the members by the chairman a minimum of two days before each meeting.

Karl S. Landstrom
Director

BUREAU ORDER DISTRIBUTION LIST

UNITED STATES
DEPARTMENT OF THE INTERIOR
Bureau of Land Management
Washington 25, D. C.

March 24, 1961

Bureau Order No. 671

Subject: Delegation of Authority to Negotiate Contracts for professional photogrammetric engineering services - Alaska

Section 1. Delegation. Pursuant to the authority in Section 3 of Order No. 2851 of the Secretary of the Interior dated March 15, 1961, the Area Administrator, Area 4, is authorized subject to the provisions of Section 2 of this order, to exercise the authority delegated by the Administrator of General Services Administration to the Secretary of the Interior (24 F.R. 1921) to negotiate, without advertising, under Section 302 (c) (4) of the Federal Property and Administrative Services Act of 1949, as amended (41 U.S.C. 252 (c)) contracts for photogrammetric engineering projects during the remainder of fiscal year 1961 and the first half of fiscal year 1962 in connection with the State Selection survey program in Alaska.

Section 2. Exercise of authority. The authority delegated by section 1 of this order shall be exercised in accordance with the applicable policies, procedures and controls prescribed by the General Services Administration and the Department of the Interior. The authority delegated by this order does not include authority to make advance payments under section 305 of the act.

A. H. Hedquist

Associate Director

BUREAU ORDER DISTRIBUTION

UNITED STATES
DEPARTMENT OF THE INTERIOR
Bureau of Land Management
Washington 25, D. C.

March 28, 1961

BLM Order No. 672

Subject: Policy on Fraternization

It is considered unethical for any employee of the Bureau of Land Management to associate with persons, or employees of persons, having contracts or other business relationships with the Bureau of Land Management, in a manner that such association could lead others to believe or even suspect that conflict of interest, favoritism, collusion, or other conduct or practices inconsistent with the conscientious performance of official governmental duties, exists. Employees responsible for contract inspection are particularly vulnerable to charges of fraternization and should act in accordance with the highest standards of ethical conduct to avoid adverse reflection on the Bureau or themselves.

Any violation of this policy will make the employee liable to disciplinary action as the facts may warrant.

Karl S. Landstrom
Director

Bureau Order Distribution List

UNITED STATES
DEPARTMENT OF THE INTERIOR
Bureau of Land Management
Washington 25, D. C.

April 14, 1961

Bureau Order No. 221

Subject: Delegation of Authority - Administrative Matters

Effective May 1, 1961, all authority formerly delegated to the Area Administrators will respect to personnel management, property management, budget and fiscal affairs and contracts for construction, supplies, and services is hereby delegated to the respective field administrative officers.

All such authority formerly delegated to the State Supervisors is hereby delegated to the respective field officers.

/s/ H. R. Hochmuth
Associate Director

APPROVED FOR DISTRIBUTION List

1213.3
1710

UNITED STATES
DEPARTMENT OF THE INTERIOR
Bureau of Land Management
Washington 25, D. C.

May 10, 1961

Bureau Order No. 674, Amendment No. 1

Subject: Consolidation of Field Offices

Consistent with Departmental approval of the extension of the Bureau's State organization to Alaska, the Bureau's area organization in Alaska no longer exists. The Alaska activities of the Bureau will be in charge of a State Director and all references to an area office should be discontinued.

Bureau Order No. 674 is accordingly amended to include the State of Alaska. As pointed out in this order general administrative services will be provided to Alaska by an Administrative Field Office which will be headed by a Field Administrative Officer. For the time being the operations offices at Juneau, Anchorage, and Fairbanks will continue to operate as in the past.

/s/ H. R. Hochmuth
Associate Director

Bureau Order Distribution List

1213.3
1710

UNITED STATES
DEPARTMENT OF THE INTERIOR
Bureau of Land Management
Washington 25, D. C.

April 21, 1961

Bureau Order No. 674

Subject: Consolidation of Field Offices

Pursuant to consolidation plans approved by the Secretary, Bureau area offices in Portland, Salt Lake City and Denver, will cease to exist beginning May 1, 1961. At that time all references to area offices should be discontinued.

General administrative services will be provided to State offices by administrative field offices which will be headed by a Field Administrative Officer. These offices will service the same constituent states formerly served by the respective area offices. Administrative delegations formerly made to the Area Administrators, have now been made to the Field Administrative Officers by Bureau Order 673. These offices will be identified as follows:

United States
Department of the Interior
Bureau of Land Management
Administrative Field Office
(Location)

The designation and identification of State offices and land offices are not changed in the consolidation except that effective May 1, the title of the heads of the State offices will be State Directors. All authority formerly delegated to State Supervisors and certain additional authorities have now been delegated to State Directors by Bureau Order No 541, Amendment No. 17, dated April 21, 1961.

State offices will be identified as follows:

United States
Department of the Interior
Bureau of Land Management
State Office
(Location)

Land offices will be identified as follows:

United States
Department of the Interior
Bureau of Land Management
Land Office
(Location)

Offices formerly identified as District Forestry Offices or District Grazing Offices will now be identified as District Offices headed by a District Manager. No change is anticipated in the authority and operations of these offices. District offices will be identified as follows:

UNITED STATES
Department of the Interior
Bureau of Land Management
District Office
(Location)

Necessary changes to conform with this Order shall be made promptly in Bureau telephone and other directories, office lettering and signs, letterheads, forms, etc.

The standard identifications as indicated herein shall apply to stationery, office doors, buildings, equipment, and directories. All identification of Bureau offices as Area offices, District Forestry Offices, and District Grazing Offices shall cease beginning May 1, 1961.

Bureau Order No. 542 of April 30, 1954, is hereby revoked.

/s/ H. R. Hochmuth
Acting Director

Bureau Order Distribution

1213.3
1710

UNITED STATES
DEPARTMENT OF THE INTERIOR
Bureau of Land Management
Washington 25, D. C.

April 21, 1961

Bureau Order No. 676

Subject: Consolidation of Field Offices

Pursuant to consolidation plans approved by the Director, Bureau of Land Management, Bureau offices in Portland, Salt Lake City and Denver, will cease to exist beginning May 1, 1961. At that time all referenced to field offices should be discontinued.

Central administrative services will be provided in these offices by administrative field offices which will be headed by a Field Administrative Officer. These offices will service the same constituent states formerly served by the respective area offices. Administrative delegations formerly made to the Area Administrators, have now been made to the Field Administrative Officers by Bureau Order 673. These offices will be identified as follows:

United States
Department of the Interior
Bureau of Land Management
Administrative Field Office
(Location)

The designation and identification of State offices and land offices are not changed in the consolidation except that effective May 1, the title of the heads of the State offices will be state directors. All authority formerly delegated to State Supervisors and certain additional authorities have now been delegated to State Directors by Bureau Order No. 541, Amendment No. 17, dated April 21, 1961.

State offices will be identified as follows:

United States
Department of the Interior
Bureau of Land Management
State Office
(Location)

Land offices will be identified as follows:

United States
Department of the Interior
Bureau of Land Management
Land Office
(Location)

[illegible] formerly identified as [illegible]
[illegible]
offices will be identified as follows:

United States
Department of the Interior
Bureau of Land Management
District Office
(Location)

[illegible] signs, letterheads, forms, etc.

The standard identifications as indicated herein shall [illegible]
All identification of Bureau offices as Area offices, District Forestry Offices, and District Grazing Offices shall cease [illegible] ning Mar 1, 1961.

Bureau Order No. 542 of April 30, 1954, is hereby revoked.

Acting Director

BUREAU ORDER DISTRIBUTION

UNITED STATES
DEPARTMENT OF THE INTERIOR
Bureau of Land Management
Washington, D. C. 20240

1400-451 (6.02d-1)

November 6, 1963

BUREAU ORDER No. 675, AMENDMENT No. 1

SUBJECT: Redelegation of Authority - Incentive Awards Program

Item No. 1 of Bureau Order 675 dated May 15, 1961 is amended to read as follows:

1. SUPERIOR PERFORMANCE AND QUALITY INCREASE AWARDS - Field Incentive awards committees are authorized to grant superior performance awards where the amount of the award does not exceed $200. These committees are also authorized to approve quality increase awards to employees in grades through GS-9 under the provision of Section 702 of the Classification Act of 1949, as amended by the Federal Salary Reform Act of 1962, Executive Order No. 11073 and the Civil Service Commission regulations.

J. P. Beirne
Acting Director

BUREAU ORDER DISTRIBUTION LIST

UNITED STATES
DEPARTMENT OF THE INTERIOR
Bureau of Land Management
Washington 25, D. C.

May 15, 1961

BUREAU ORDER NO. 675

Subject: Redelegation of Authority - Incentive Awards Program

In order to continue the decentralized Incentive Awards Program, field incentive awards committees will be formed at each administrative field office. Committee membership will be designated by the Field Administrative Officer. The State Directors at Portland, Salt Lake City, Denver and Juneau shall, at the request of the Field Administrative Officer, designate such technical personnel to serve on the committee as is necessary to assist in properly evaluating suggestions, honor awards, and outstanding performance ratings. The Field Administrative Officer is authorized to take necessary steps to place adopted suggestions in effect before an award is granted.

The field incentive awards committees are delegated the following authority:

1. SUPERIOR PERFORMANCE RATINGS - Field incentive awards committees are authorized to grant superior performance awards where the amount of the award does not exceed $200.

2. OUTSTANDING PERFORMANCE RATINGS - Field incentive awards committees are authorized to take final action on outstanding performance ratings except those which by existing instructions require review in the Director's office.

3. SUGGESTIONS - Field incentive awards committees are authorized to grant cash awards not to exceed $200. If the amount of the award exceeds $200., the suggestion should be forwarded to the Bureau Incentive Awards Committee for appropriate action.

Suggestions involving changes in Bureau-wide procedures established by Bureau Manual, or otherwise, and suggestions involving modifications of Bureau-wide forms may not be adopted by the field incentive awards committee. Such suggestions should be forwarded to the Bureau committee in those instances where favorable action is recommended by the field committee.

Suggestions adopted by the field committee which are of a nature warranting Bureau-wide consideration shall be forwarded to the Bureau committee for consideration as to the granting of a supplemental award where appropriate.

The field committees are authorized to take adverse action on any suggestion found not feasible of adoption.

4. LENGTH OF SERVICE AWARDS - Field incentive awards committees are authorized to approve length of service awards. Ten years of total Government service entitles employees to receive special lapel emblems. At intervals of ten years, and after, up to and including 30 years, similar recognition will be given by using lapel emblems signifying the period. The Field Administrative Officer will maintain necessary records and provide lists of persons entitled to receive length of service emblems. Presentation shall be made semi-annually as of January 1 and July 1.

PROCEDURES

1. DOCKETING - Pursuant to 367 DM 3.1 each suggestion and superior performance recommendation will be docketed on the form indicated. Three copies of the docket form shall be forwarded to the Bureau Incentive Awards Committee at the end of each month.

2. NUMBERING - Each suggestion and superior performance recommendation shall be numbered beginning with No. 1 for each fiscal year as prescribed by the Manual. In order to insure uniformity, the following system of numbering will be used:

Suggestions received at Portland will be numbered BLM 1-61-1, etc.
Suggestions received at Salt Lake City will be numbered BLM 2-61-1, etc.
Suggestions received at Denver will be numbered BLM 3-61-1, etc.
Suggestions received at Juneau will be numbered BLM 4-61-1, etc.

Superior performance recommendations will be numbered as follows:

Those received at Portland - SP 1-61-1, etc.
Those received at Salt Lake City - SP 2-61-1, etc.
Those received at Denver - SP 3-61-1, etc.
Those received at Juneau - SP 4-61-1, etc.

3. ACTION BY FIELD COMMITTEES - The procedures outlined in 367 DM .3 will be followed by the field committees in adopting or rejecting suggestions and superior performance recommendations. Copies of all such letters shall be forwarded to the Bureau Incentive Awards Committee.

4. REPORTS - Reports as required by 367 DM .4 shall be submitted quarterly on a fiscal year basis not later than five days after the closing period. These reports shall be consolidated into a Bureau quarterly report by the Bureau Incentive Awards Committee and submitted to the Secretary's office not later than 15 days after the closing period.

4. [illegible] - While the submission of suggestions through regular supervisory channels is encouraged, notice to this order is intended to preserve the consideration of suggestions direct to the Bureau Incentive Awards Committee.

Bureau Order No. 640, dated April 24, 1957, is hereby rescinded.

/s/ James F. Doyle
Acting Associate Director

BUREAU ORDER DISTRIBUTION

1214.1
1400-713

UNITED STATES
DEPARTMENT OF THE INTERIOR
Bureau of Land Management
Washington, D. C. 20240

In Reply Refer To:
6.02e:

October 28, 1963

BUREAU ORDER No. 676, AMENDMENT No. 1

SUBJECT: Nondiscrimination Policy in Government Employment as Announced in Executive Order 10925 dated March 6, 1961

Paragraph 6 of Bureau Order No. 676 of May 16, 1961 is amended to read as follows:

> The following are hereby designated as Field Employment Policy Officer for their respective areas of responsibility:
>
> Field Administrative Officer, Bureau of Land Management, 1002 N. E. Holladay Street, P. O. Box 3861, Portland, Oregon, for all employees headquartered in the States of Alaska, Washington, Oregon, and California.
>
> Field Administrative Officer, Bureau of Land Management, Federal Center Bldg No. 50, Denver, Colorado, for all employees headquartered in the States of Montana, Wyoming, Colorado, New Mexico, Idaho, Utah, Arizona and Nevada.

/s/ H. R. Hochmuth

Associate Director

BUREAU ORDER DISTRIBUTION LIST

In Reply Refer To:
5.05a

UNITED STATES
DEPARTMENT OF THE INTERIOR
BUREAU OF LAND MANAGEMENT
Washington 25, D. C.

1214.1
1400-713

May 17, 1961

Order No. 676

Subject: Nondiscrimination Policy in Government Employment as Announced in Executive Order 10925 dated March 6, 1961

This order supersedes and revokes Order No. 658 and is issued for the purpose of designating Employment Policy Officers of the Bureau and to inform all employees of Department and Bureau policy on nondiscrimination in employment.

Executive Order 10925 dated March 6, 1961, sets forth the policy of the United States Government that equal opportunity shall be afforded all qualified persons consistent with law for employment in the Federal Government. This policy excludes and prohibits discrimination against any employee or applicant for employment in the Federal Government because of race, color, religion, or national origin and is limited to citizens of and persons who owe allegiance to the United States.

It is the policy of the Department and of the Bureau to carry out the letter and spirit of Executive Order 10925 to eliminate bias and intolerance in employment. As provided in Secretarial Order No. 2852 dated March 31, 1961, the Department's regulations issued under Executive Order 10590 will remain in effect pending issuance of new or amended regulations by the President's Committee on Equal Employment Opportunity.

The Secretary has designated the Administrative Assistant Secretary, Department of the Interior, Washington 25, D. C., as the Department Employment Policy Officer and the Director of Inspection, Department of the Interior, Washington 25, D. C., as the Deputy Employment Policy Officer to be responsible for carrying out the responsibilities set forth in Part II of Executive Order 10925 with respect to all personnel matters of the Department.

The Assistant Director, Administration, Bureau of Land Management, Washington 25, D. C., is hereby designated as the Bureau Employment Policy Officer for all employees attached to the Washington and Eastern States Offices.

The following are hereby designated as Field Employment Policy Officer for their respective areas of responsibility:

> Field Administrative Officer, Bureau of Land Management, 1002 N. E. Holladay Street, P. O. Box 3861, Portland 8, Oregon, for all employees headquartered in the States of Washington, Oregon and California
>
> Field Administrative Officer, Bureau of Land Management, 310 Boston Bldg., P. O. Box 659, Salt Lake City, Utah, for all employees headquartered in the States of Idaho, Utah, Arizona and Nevada
>
> Field Administrative Officer, Bureau of Land Management, Federal Center Bldg. No. 50, Denver, Colorado, for all employees headquartered in the States of Montana, Wyoming, Colorado and New Mexico
>
> Field Administrative Officer, 238 Seward Street, P. O. Box 1481, Juneau, Alaska, for all employees headquartered in the State of Alaska

It shall be the duty of Employment Policy Officers of the Bureau to receive and handle complaints from employees of the Bureau or any applicant for employment and to perform such other duties as may be prescribed in complying with the Department's existing regulations. For purposes of this order the grounds of admissible complaint are limited to alleged discriminatory administrative actions based on race, color, religion, or national origin, and not on merit and fitness.

Complaints may be filed with the Department Employment Policy Officer or his Deputy, the Bureau Employment Policy Officer, Field Employment Policy Officers of the Bureau, or the President's Committee on Equal Employment Opportunity. The Department's regulations which are posted in all Bureau offices describe the requirements as to time limit for filing and the form and substance of complaints which must be observed by complainants. Questions regarding these regulations should be addressed personally or in writing to the appropriate Employment Policy Officer of the Bureau.

A copy of this order shall be furnished to each employee who enters on duty in the Bureau.

A copy of this order shall be posted along with the Department's regulations in all Bureau offices. Also a copy of this order shall be posted on Bureau bulletin boards which are used to announce Federal examinations and job opportunities.

Karl L. Landstrom

Director

Distribution: Desk-to-desk

93529

UNITED STATES
DEPARTMENT OF THE INTERIOR
Bureau of Land Management
Washington 25, D. C.

May 17, 1961

Bureau Order No. 677

Subject: Distribution of Publications

From time to time BLM offices are asked to furnish large quantities of publications, booklets and other documents to non-Government concerns or private individuals.

The Bureau of Land Management will not furnish publications free to a non-Government concern or private individual for redistribution on a sales basis to the public, or for subsequent free distribution if not necessary to the public business. Regulations of the Joint Congressional Committee on Printing limit the number of copies of any one publication that may be sent officially (free) to a private individual, firm or corporation to 50 copies, or to a number valued up to $10. It is the practice of the Bureau to hold the number of copies to 5 whenever possible.

In the distribution of official publications preference should be given to libraries, educational and scientific institutions, the press, State and Federal officials and agencies connected with resources and other public bodies and agencies, and those persons rendering tangible service to the Bureau of Land Management and the Department of the Interior. The limit on number of copies to be distributed will also apply to the preferred agencies, except that the limit will not be adhered to when the agency requesting the publications is cooperating with the Bureau and the Department on some definite project and the publications are necessary in carrying out the project.

/s/ James F. Doyle
Acting Associate Director

Bureau Order Distribution List

Revoked
Sec 683

Subject: Delegation of Authority in Connection with Appeals to the Director Bureau of Land Management

Section 1. Pursuant to the authority and subject to the limitations contained in Order 2583 of the Secretary of the Interior, the Chief, Division of Appeals of the Bureau of Land Management is authorized to sign all decisions involving appeals to the Director, Bureau of Land Management filed pursuant to 43 CFR Part 161 and 221.

Section 2. Bureau Order No. 668 of February 2, 1961 is hereby revoked.

/s/ Karl S. Landstrom
Director

BUREAU ORDER DISTRIBUTION LIST

Revoked by 698

UNITED STATES
DEPARTMENT OF THE INTERIOR
Bureau of Land Management
Washington 25, D. C

September 13, 1961

ORDER NO. 679, Amendment No. 2

Subject: Delegation of Authority - Contracts and Leases

Sec. 1(a) is hereby amended to read as follows:

Sec. 1 Authority of Certain Offices to enter into [illegible] Secs. 50 and 52 of amended Order No. 2509, of the Secretary of the Interior; 200 DM 3.2; and 205 DM 11.4A(3) the classes of employees listed in sub-paragraph (5) below:

(1) Are authorized to enter into contracts for construction, supplies (including the rental of equipment) or services, irrespective of amount 1/; and enter into leases of space in real estate as provided in these sections.

(2) Are authorized under 205 DM 11.4A to negotiate contracts without advertising under Sec. 302(c)(1) of the Federal Property and [illegible] subject to the limitations set out in 205 DM 11.4A(2) and (3).

(3) Are authorized under 205 DM 11.4B to negotiate contracts without advertising under paragraphs (2), (3), (4) and (5) of Sec. 302(c) of the Federal Property and Administrative Services Act of 1949, as amended.

(4) Are authorized under 205 DM 11.4C to negotiate contracts under Sec. 302(c)(14) of the Federal Property and Administrative Services Act of 1949, as amended.

(5) Those authorized to exercise the authority delegated by this section are:

Assistant Director - Administration
Chief, Division of Administrative Services
Field Administrative Officers
State Directors

/s/ H. R. Hochmuth
Acting Director

1/ Two days advance telegraphic notice must be given to the Secretary of the Interior prior to the announcement of a pending award of any contract in excess of $10,000.

BUREAU ORDER DISTRIBUTION LIST

Revoked by 698

UNITED STATES
DEPARTMENT OF THE INTERIOR
Bureau of Land Management
Washington 25, D. C.

August 11, 1961

ORDER NO. 679, Amendment No. 1

Subject: Delegation of Authority - Contracts and Leases

Sec. 1(a) is hereby amended to read as follows:

Sec. 1. Authority of Certain Offices to enter into Contracts and Leases. (a) Pursuant to the authority contained in Secs. 30 and 32 of amended Order No. 2509, of the Secretary of the Interior, the classes of employees listed in sub-paragraph (4) below:

(1) Are authorized to enter into contracts for construction, supplies (including the rental of equipment) or services, irrespective of amount 1/; and enter into leases of space in real estate as provided in those sections.

(2) Are authorized under DM 205.11A.4 to negotiate contracts without advertising under Sec. 302(c)(1) of the Federal Property and Administrative Services act of 1949, as amended, subject to the [illegible]

(3) Are authorized under DM 205.11.4B to negotiate contracts without advertising under paragraphs (2), (3), (4), and (5) of Sec. 302(c) of the Federal Property and Administrative Services act of 1949, as amended.

1/ Two days advance telegraphic notice must be given to the Secretary of the Interior prior to the announcement of a pending award of any contract in excess of $10,000.

by this section are.

Chief, Division of Administrative Services

Fiscal Administrative Officer

Revoked by 696

UNITED STATES
DEPARTMENT OF THE INTERIOR
Bureau of Land Management
Washington 25, D. C.

June 17, 1961

[illegible]

Subject: Delegation of Authority - Contracts and Leases

[illegible] and Leases (a) Pursuant to the authority contained in Secs. 32 and [illegible] for construction, supplies (including the rental of equipment) or services, irrespective of amount; [illegible] and enter into leases [illegible] of space to real estate [illegible]

Assistant Director - Administration

Chief, Division of Administrative Services

Field Administrative Officers

State Directors

(b) The Managers of the local offices of the Bureau located at St. Paul, Minnesota and New Orleans, Louisiana, are authorized to enter into such contracts when the amount in any such contract does not [illegible]

(c) Hearing Examiners appointed to conduct hearings in accordance with the Federal Range Code (43 CFR, Part 161) or the Department's rules of practice (43 CFR, Part 221) are authorized to issue purchase orders for reporter's services, not to exceed $2,[illegible] in cost for any one order, under any applicable contracts for stenographic reporting awarded by the Department or the General Services Administration; and to make open market purchases for such services not to exceed $1,500. Hearing Examiners are also authorized to enter into contracts for supplies and equipment when the amount in any such contract does not exceed $500 and the supplies and equipment purchased are non-capitalized in nature.

(d) The State Directors and Field Administrative Officers may, in writing, redelegate to any qualified employees under their jurisdiction the authority granted under Sec. 1(a). Each redelegation shall be published in the Federal Register.

(e) Contracts and leases entered into under this authority must conform with applicable regulations and statutory requirements and are subject to the availability of appropriations.

Sec. 2 Negotiations of Contracts with Educational Institutions.

(a) Pursuant to authority contained in Order 2713, of January 13, 1953, the State Directors and Field Administrative Officers are authorized to negotiate without advertising, pursuant to Sec. [illegible] (c)(5) of the Federal Property and Administrative Services Act of 1949, as amended (41 U.S.C., Sec. 252), contracts for services to be rendered by any University, College, or other educational institution, in connection with programs and activities of the Bureau.

(b) This authority shall be exercised in accordance with [illegible] applicable [illegible] in the General Property and Administrative Services Act of 1949, as amended and in accordance with applicable policies, [illegible] merit principles by the General Services Administration.

Sec. 3 Revocation. Bureau Order No. 615 and amendments 1 through 5 are hereby revoked.

/s/ H. R. Hochmuth
Associate Director

Bureau Order Distribution List

1214.1
1533

Superseded

UNITED STATES
DEPARTMENT OF THE INTERIOR
Bureau of Land Management
Washington 25, D. C.

June 29, 1961

ORDER NO. 680

Subject: Delegation of Authority - Transfer and Disposal of Real and Related Personal Property

Section 1 Delegation of Authority. Pursuant to the authority contained in Section 4 of Order 2830 of September 8, 1958 of the Secretary of the Interior, the Assistant Director - Administration, the Chief, Division of Administrative Services, Field Administrative Officers and State Directors may exercise the authority granted to the Director Bureau of Land Management by Section 2 of the order with respect to the assignment transfer and disposition of real property and related personal property.

Section 2 Exercise of Authority. The authority granted by this order shall be exercised in accordance with the provisions of the Federal Property and Administrative Services Act of 1949, as amended (40 U.S.C. Sec. 471 et. seq.); the regulations of the General Services Administration, and the regulations of the Department of the Interior.

Section 3 Redelegation. The Field Administrative Officers and State Directors may in writing redelegate to any qualified employees within their jurisdictions the authority granted by this order. Each redelegation shall be published in the Federal Register.

Section 4 [illegible] of [illegible]

1960 is hereby revoked.

/s/ Harold Hochbuth
Associate Director

Bureau Order Distribution List

1214.1
1527

Superseded

Revoked by Instr. Memo 64-309 6/15/64

1541
1214.2
6.02d-1

UNITED STATES
DEPARTMENT OF THE INTERIOR
Bureau of Land Management
Washington 25, D. C.

January 29, 1963

Bureau Order No. 682, Amendment No. 1

Subject: Signing of Bureau Correspondence

Section 2 of Bureau Order No. 682 of July 7, 1962 is amended to read as follows:

2. Assistant Directors. Except for matters which propose or establish broad Bureau policy and matters specifically requiring the signature of the Director or Associate Director, the Assistant Directors may sign all matters within their respective functional areas of responsibility as outlined in Departmental Manual Part 135. As to matters primarily but not entirely within their respective functional areas of responsibility, they may also sign with the concurrence of each other Assistant Director concerned; otherwise in any such matters, signature shall be by the Director or Associate Director.

Karl S. Landstrom
Director

Distribution:
Bureau Order List

Revoked per Inst. Memo 64-309 6/15/64

1541
1214.2

UNITED STATES
DEPARTMENT OF THE INTERIOR
Bureau of Land Management
Washington 25, D. C.

July 7, 1961

Bureau Order No. 682

Subject: Signing of Bureau Correspondence

1. Director or Associate Director. The Director or Associate Director shall sign Bureau orders, proposed regulations, other than routine legislative matters, organizational changes and other documents which propose or establish broad Bureau policy all of which are of more than routine importance. All matters of an especially sensitive nature which are addressed to the Director shall be signed by him or the Associate Director.

2. Assistant Directors. Except for matters which propose or establish broad Bureau policy and matters specifically requiring the signature of the Director or Associate Director, the Assistant Directors may sign all matters within their respective functional areas of responsibility as outlined in Departmental Manual Part 135.

3. Staff Officers. Staff Officers shall sign responses to inquiries which have been addressed to them relating to all matters of routine importance within the exclusive area of their functional responsibilities, including Congressional correspondence.

(1) They shall also sign responses to inquiries relating to broad Bureau policy and sensitive matters which are

addressed to them, but only after securing the concurrence of the Director or appropriate Assistant Director.

(2) They shall also sign, over their own organization title, responses to inquiries addressed to the Director or referred to the Bureau relating to matters of routine importance within their functional area of responsibility. Responses to inquiries from outside the Bureau shall contain an introductory statement similar to one of the following:

"The (Secretary) (Director) has asked me to reply to your letter of _____."

"The (Secretary) (Director) has asked me to make such arrangements that are necessary to _____."

4. Staff Officer Signing Titles. Except in those instances where the "Officer" title is widely used and uniformly recognized throughout the Federal Service, all division and branch heads will use the signing title "Chief, Division of _____" or "Chief, Branch of _____." The use of the "Officer" or other similar title is permitted only in those instances where such title is widely used and is the regularly referred to title in the Federal Service. Unless otherwise authorized by the Assistant Director, Administration, the use of such titles shall be confined to the Information Officer and the Divisions of Audit, Personnel and Budget and Finance. Other employees specifically authorized to sign correspondence shall sign over their own organizational titles.

5. Signing by Acting Officials. A person designated to act in the absence of a staff officer or other official within the headquarters office or field offices shall use the acting title of the person for whom he is acting. For example a person designated to act in the absence of the State Director shall sign "Acting State Director". A person designated to act as Land Office Manager shall sign as "Acting Land Officer Manager". In such instances the name of the person for whom he is acting should not be typed on the correspondence.

6. Signing and Addressing of Correspondence to Washington Office. All correspondence to the Washington Office shall be addressed to the Director. Correspondence shall be signed by the head of the office or his designee. As a general rule normal supervisory channels shall be followed in the transmittal of such correspondence. Replies to correspondence shall include the code reference of the original correspondence as specifically provided for in the memorandum of September 12, 1960 to all Bureau Offices.

7. Addressing of Correspondence to Field Offices. As a general rule, correspondence to field offices will be addressed to the appropriate State Director or Field Administrative Officer. Correspondence requesting specific information regarding case files may be addressed to the appropriate Land Office Manager or District Manager. In such instances a copy of the request shall be sent to the State Director. In order that correspondence to the Field Offices may be uniformly prepared the title of the person signing a

memorandum shall be included on the "From" line on such a memorandum.

/s/ H. R. Hochmuth
Acting Director

Bureau Order Distribution List

UNITED STATES
DEPARTMENT OF THE INTERIOR
Bureau of Land Management
Washington 25, D. C.

Revoked by Bureau Order No. 692

August 21, 1961

ORDER NO. 683

Subject: Delegation of Authorities in Connection with Appeals to the Director, Bureau of Land Management

Sec. 1. Pursuant to the authority and subject to the limitations contained in Order No. 2583 of the Secretary of the Interior, the Chief, Division of Appeals of the Bureau of Land Management, is authorized to sign all decisions and all correspondence involving appeals to the Director, Bureau of Land Management filed pursuant to 43 CFR Part 161 and 221.

Sec. 2. The Chief or Acting Chief of the Division of Appeals may in writing redelegate to any qualified employee in the Division of Appeals the authority granted by this order. Each redelegation shall be published in the Federal Register.

Sec. 3. Bureau Order No. 678 of June 23, 1961, is hereby revoked.

/s/ Karl S. Landstrom
Director

BUREAU ORDER DISTRIBUTION LIST

DEPARTMENT OF THE INTERIOR

Bureau of Land Management

(Bureau Order No. 684 and Amdts. 1–3)

LANDS AND RESOURCES [1]

Redelegations of Authorities

AUGUST 28, 1961.

PART I—REDELEGATIONS OF AUTHORITY IN STATE DIRECTORS

AUTHORITY IN GENERAL

Redelegations of authorities concerned with lands and resources.

SECTION 1.0 *Functions of the State Director.* (a) The State Directors of the Bureau of Land Management are authorized to perform in their respective states [2] and in accordance with existing policies, regulations, and procedures of this Department, the functions of the Director, Bureau of Land Management, listed in Part I of this order, including all types of actions in the matters listed, unless specifically limited.

(b) Limitations. In addition to limitations on authority in specified matters, the authority delegated to the State Director shall not include:

(1) The issuance of documents which are amendments of or additions to the Code of Federal Regulations.

(2) The exercise of the supervisory powers of the Secretary, whether by way of appeal to the Secretary or otherwise.

(3) The issuance of patents or their equivalent.

(4) Approval of exchanges of land or of timber for land if the selected lands exceed $50,000 in value unless prior clearance is obtained from the Director's Office. 1/

SEC. 1.1 *Authority to redelegate.* (a) Each State Director may redelegate or authorize the redelegation of any authority vested in him by this order to any qualified employee under his jurisdiction, except the authority to appoint acting State Directors. Any order of redelegation of authority pursuant to this section must be approved by the Director, Bureau of Land Management and published in the FEDERAL REGISTER, except that:

(1) The State Director may without such approval redelegate to any qualified employee on his immediate staff authority to take actions on behalf of the State Director in matters listed in sections 1.2 through 1.9 of Part I (according to the staff member's functional responsibilities).

(b) Any authority redelegated by the State Director may, in his discretion, be exercised personally by him notwithstanding the redelegation of authority.

AUTHORITY IN SPECIFIED MATTERS

SEC. 1.2 *General and miscellaneous matters.* The State Director may take the following actions, where he has authority in matters listed under other sections of this order:

(a) *Oaths.* Authorize any employee designated to make investigations of matters under the jurisdiction of the Bureau to administer any oath, affirmation, affidavit or deposition provided under the act of October 14, 1940 (5 U.S.C. 498), whenever necessary in the performance of such employee's official duties.

(b) *Cancellations or surrenders of contracts, leases, and permits.* Make partial or complete cancellations or accept surrenders of contracts, leases, and permits.

(c) *Copies of records.* Furnish copies and exemplifications of patents, plats, and other records.

(d) *Gifts.* Accept on behalf of the United States any lands within or without a grazing district as a gift, where such action will promote the purposes of the district or facilitate the administration of the public lands, pursuant to section 8a of the Taylor Grazing Act, as amended (43 U.S.C. section 315g).

(e) *Government contests.* Initiate Government contests against claims asserted to public lands, and take all necessary actions involving the prosecution of such contests except the presentation of the Government's case at the hearing.

(f) *Reports and certifications in connection with Federal land highway projects.* Make reports and certifications as to public lands, in connection with Federal land highway projects, required by (23 U.S.C. 202c).

(g) *Pro-rata road use and maintenance deposits.* Require a user or users of roads or trails to maintain such roads or trails on a pro-rata basis or to accept deposits to provide for such maintenance and to expend such deposited funds for the maintenance of any road or trail under the jurisdiction of the Bureau (43 U.S.C. 1382).

---

[1] Authority source—Department Order as amended.

[2] The State Director for Montana shall also have jurisdiction in the States of North and South Dakota. The State Director for Wyoming shall also have jurisdiction in the States of Nebraska and Kansas. The State Director for New Mexico shall also have jurisdiction in the States of Oklahoma and Texas. The State Director for Oregon shall also have jurisdiction in the State of Washington.

(h) *Cooperative agreements.* May enter into cooperative agreements involving the improvement, management, use and protection of the public lands and their resources under his jurisdiction as provided in the Public Land Administration Act (43 U.S.C. 1363). May enter into Cooperative Agreements under sections 2, 9 and 12 of the June 28, 1934 act (43 U.S.C. 315 et seq.) and under the Act of March 29, 1928 (45 Stat. 380).

Cooperative agreements not clearly within the scope of existing Bureau policies and procedures shall have advance clearance of the Director's office.

(i) *Studies.* May conduct studies, investigations, and experiments, on his own initiative or in cooperation with others, involving the improvement, management, use and protection of the public lands and their resources under his jurisdiction as provided in the Public Land Administration Act (43 U.S.C. 1362).

(j) *Fire protection.* Make contracts and cooperative agreements with Federal, State, County, Municipal and private fire-control organizations for the protection from fire (prevention, presuppression, and suppression) of the public lands under the jurisdiction of the Bureau of Land Management.

SEC. 1.3 *Fiscal affairs.* The State Director may take the following actions:

(a) *Bonds and forfeitures.* (1) Take all actions on bonds required in connection with matters pertaining to the lands or the resources thereof under his jurisdiction.

(2) Expend funds made available as a result of the forfeiture of a bond or deposit by a timber purchaser or permittee or of a compromise under the Public Land Administration Act (43 U.S.C. 1381).

(b) *Contributions, donations, and refunds.* (1) Accept contributions or donations of money, services and property for the improvement, management, use and protection of the public lands and their resources under his jurisdiction. Also accept contributions for cadastral surveying performed on federally controlled or intermingled lands under the Public Land Administration Act (43 U.S.C. 1364).

(2) Accept contributions toward the administration, protection and improvements of lands within or without grazing districts and remit or refund any unappropriated balances of such contributions pursuant to section 9 of the Taylor Grazing Act (43 U.S.C. section 315h).

(c) *Repayment.* Make repayment or refund from applicable funds in any case where payment has been made that is not required or is in excess of the amount required under the Public Land Administration Act (43 U.S.C. 1374); and repayments under 43 CFR Part 217.

(d) *Trespass.* Determine liability and accept damages for trespass on the public lands, and dispose of resources recovered in trespass cases for not less than the appraised value thereof; recommend to the United States Attorney:

(1) Institution of suits arising out of trespass where the money judgment sought is not in excess of $1,000, and

(2) compromise of such suits where the amount is not in excess of $500.

SEC. 1.4 *Cadastral engineering.* The State Director may take the following actions:

(a) *Survey.* (1) Perform all functions pertaining to the survey and resurvey of the public lands under his jurisdiction pursuant to section 453 of the Revised Statutes (43 U.S.C. section 2) except the acceptance of plats of survey, resurvey and the approval of protracted survey diagrams.

(2) Recommend to the Director for appointment mineral surveyors found to be competent pursuant to section 2334 of the Revised Statutes (30 U.S.C. section 39).

(3) Approve plats and field notes of mineral surveys and certification as to expenditures pursuant to 43 CFR 185.43.

(4) Prepare and publish in the FEDERAL REGISTER notices of the official filing of accepted plats of survey, resurvey and approved protracted survey diagrams.

SEC. 1.5 *Classifications and withdrawals.* The State Director may take the following actions:

(a) *Classification of lands.* Classify public lands under section 7 of the Taylor Grazing Act of June 28, 1934, as amended (43 U.S.C. 315f), or pursuant to other laws.

(b) *Withdrawals and reservations.* 1/
(1) Act on matters pertaining to the withdrawals or reservation of Federal lands and the elimination of such lands from withdrawal or reservation pursuant to 43 CFR Part 295, including determinations pursuant to section 3(d) of the Federal Property and Administrative Services Act of 1949 as amended (40 U.S.C. 472d) except the authority to issue orders of withdrawal or reservation and orders eliminating lands from withdrawal or reservation.

(2) Determine pursuant to 43 CFR Part 295 with the concurrences of the Administrator of General Services or his delegate when required that specific lands withdrawn or reserved from the public domain and subsequently declared excess to the needs of the agency for which withdrawn or reserved are suitable or not suitable for return to the public domain for disposition under the general public land laws.

(3) Determine that minerals in lands or portions of lands withdrawn or reserved from the public domain and subsequently declared excess to the needs of the agency for which withdrawn or reserved are suitable or not suitable for disposition under the public land mining and mineral leasing laws.

(c) *Restoration orders.* Issue orders of restoration where revocation or modification of a withdrawal or reservation is not involved and where an order of revocation provides for opening of the lands by an authorized officer of the Bureau. All such orders shall be published in the FEDERAL REGISTER. 1/

SEC. 1.6 *Minerals.* The State Director may take the following actions:

(a) *Oil and gas leases.* Act on oil and gas leases pursuant to the Act of February 25, 1920 (30 U.S.C. section 221 et seq.), as amended and supplemented, the Act of August 7, 1947 (30 U.S.C. sections 351–359), and the Act of May 21, 1930 (30 U.S.C. sections 301–305), and oil and gas leases issued pursuant to the Act of August 21, 1916 (39 Stat. 519), embracing lands restored to the public domain pursuant to the provisions of the Act of August 15, 1953 (67 Stat. 592). Also leases of oil and gas deposits transferred to this Department for measures to protect the deposits from drainage. This authority does not include any function pertaining to oil and gas deposits that involve approval or execution of unit or cooperative agreements, communization agreements, operating, drilling or development contracts without regard to acreage limitation or the sale of royalty oil taken in account of production.

(b) *Coal permits, leases, and licenses, asphalt leases.* (1) Act on all matters involving coal permits, leases, and licenses under sections 2 to 8 inclusive, of the Act of February 25, 1920, as amended and supplemented (30 U.S.C. sections 201–208), including coal permits and leases under the Act of August 7, 1947 (30 U.S.C. section 351–359), and coal permits and leases and asphalt leases under the Acts of June 26, 1944 (58 Stat. 483–485), June 24, 1948 (62 Stat. 596), and May 24, 1949 (63 Stat. 75).

(2) The authority delegated by this section shall not include any function relating to the grant, approval or termination of the waiver, suspension, or reduction of rental or minimum royalty, the reduction of royalty, or this suspension of operations and production under a lease.

(c) *Oil shale leases.* Take all actions on oil shale leases under section 21 of the Act of February 25, 1920 (30 U.S.C. section 241), and under the Act of August 7, 1947 (30 U.S.C. section 351–359). The authority delegated by this section shall not include any function relating to the grant, approval or termination of the waiver, suspension or reduction of rental or minimum royalty, the reduction of royalty, or the suspension of operations and production under a lease.

(d) *Phosphate permit and leases.* Take all actions on matters related to phosphate permits and leases under sections 9 to 12 inclusive, of the Act of February 25, 1920 (30 U.S.C. 211–214), as amended, and phosphate permits and leases under the Act of August 7, 1947 (30 U.S.C. 351–359).

(e) *Potassium permits and leases.* Take all actions on matters related to potassium permits and leases under the Act of February 7, 1927 (30 U.S.C. sections 281–285), as amended and potassium permits and leases under the Act of August 7, 1947 (30 U.S.C. 351–359).

(f) *Sodium permits and leases.* Take all actions on sodium permits, leases and use permits under sections 23 to 25 inclusive, of the Act of February 25, 1920, as amended (30 U.S.C. sections 261–263), and under the Act of August 7, 1947 (30 U.S.C. sections 351–359).

(g) *Sulphur permits and leases.* Take all actions on sulphur permits and leases under the Act of April 17, 1926, as amended (30 U.S.C. section 271), and under the Act of August 7, 1947 (30 U.S.C. sections 351–359).

(h) *Agreements to compensate for drainage of oil or gas.* Execute agreements for payment of compensatory royalties because of drainage of oil or gas.

(i) *Gold, silver, and quicksilver leases.* Take all actions on leases of gold, silver, and quicksilver to the owners of confirmed private land claims, pursuant to 43 CFR Part 187.

(j) *Minerals subject to lease under special laws.* Take all actions on permits and leases for sand, gravel, and other minerals under special laws, pursuant to 43 CFR Part 199; also permits and leases for certain mineral deposits in acquired lands, pursuant to 43 CFR 200.31, et seq.

(k) *Mining claims.* Take all actions on claims pursuant to the general mining laws and laws supplemental thereto and 43 CFR Parts 69, 185, and 186.

(l) *Native asphalt, solid and semisolid bitumen and bituminous rock leases.* Take all action on matters related to the leasing of native asphalt, solid and semisolid bitumen and bituminous rock, including oil impregnated rock or sands from which oil is recoverable only by special treatment after the deposit is mined or quarried, pursuant to the Mineral Leasing Act of February 25, 1920, as amended (30 U.S.C. sections 181–263). 1/

SEC. 1.7 *Range management.* The State Director may exercise the following authority:

(a) *Grazing district administration.* Act on matters pertaining to the administration of grazing districts pursuant to the Act of June 28, 1934, as amended and supplemented (43 U.S.C. section 315 et seq., 16 U.S.C. section 715i), and 43 CFR Parts 161, 163, and 165 as follows:

(1) Licenses or permits to graze or trail livestock.

(2) Permits or cooperative agreements to construct and maintain range improvements and determine the value of such improvements.

(3) The expenditure of funds appropriated by the Congress, or contributed by individuals, associations, advisory boards, or others, for the construction, purchase or maintenance of range improvements.

(4) Leases under the Pierce Act (43 U.S.C. sections 315m–1 to 315m–4 inclusive).

(5) Requirements of field employees to furnish horses and miscellaneous equipment necessary for the performance of their official duties pursuant to the Act of December 10, 1942 (43 U.S.C. section 315o–2), and make payments in connection therewith as authorized by the act.

(6) Hold hearings when necessary in connection with the modification of grazing district boundaries.

(7) Approve articles of incorporation, constitutions, and bylaws for local associations of stockmen pursuant to 43 CFR Part 161.

(b) *Grazing leases.* (1) Grazing leases of public lands, under section 15 of the Act of June 28, 1934, as amended (43 U.S.C. section 315m), and the permits or cooperative agreements to construct and maintain improvements on lands so leased, and to determine the value of such improvements.

(2) Grazing leases of the revested Oregon and California Railroad and the reconveyed Coos Bay Wagon Road grant lands in Oregon, and crossing permits for such lands, in accordance with 43 CFR Part 115.

(3) Grazing leases of public lands in Alaska, under the Act of March 4, 1927 (43 U.S.C. sections 471, 471a–471c); leases and permits for grazing of reindeer pursuant to section 14 of the Act of September 1, 1937 (50 Stat. 902; 48 U.S.C. 250m).

(c) *Appropriation of water.* Applications under State laws to appropriate water on lands under the administration of the Bureau of Land Management where required in connection with projects for the development, control or utilization of water; and procurement of easements or rights-of-way upon or over private lands, and also upon or over federally-owned lands not under the administration of the Bureau and upon or over State, county, and municipally owned lands where improvements are installed.

(d) *Soil and moisture conservation; control of Halogeton glomeratus.* (1) Soil and moisture conservation on the public lands, pursuant to the National Soil Conservation Act of April 27, 1935 (16 U.S.C. section 590a, et seq.).

(2) Surveys and other operations and the expenditure of appropriated funds and contributions, under the Halogeton Glomeratus Control Act of July 14, 1952 (66 Stat. 597), and Departmental Order No. 2835 of October 2, 1958.

(3) The authority granted by paragraphs (1) and (2) shall include authority to enter into cooperative agreements in the matters listed and shall be subject to the coordination and general supervision of the Office of the Secretary.

(e) *Controlled brush burning.* Issue permits for the controlled burning of brush, as a means of improving the range by the replacement of the brush with grass and other desirable species.

SEC. 1.8 *Forest management.* The State Director may take the following actions:

(a) *Disposition of forest products.* (1) Dispose of or permit the free use of forest products when authorized by law on lands under the jurisdiction of the Bureau of Land Management. This authority shall not include the approval of any sale of timber in excess of 25,000,000 feet, board measure.

(2) Sell timber on lands under the jurisdiction of the Bureau of Reclamation, in accordance with Department Order No. 2533 of September 7, 1949.

(b) *Hearings in connection with sustained-yield forest units.* Schedule and hold public hearings on master forest units and their appurtenant marketing areas, and on sustained-yield forest units, comprising revested Oregon and California Railroad and reconveyed Coos Bay Wagon Road grant lands in Oregon, and lands in private ownership or controlled by other public agencies, under authority of the Act of August 28, 1937 (50 Stat. 874), and (16 U.S.C. sections 383a–388i). The notice of hearing may designate any qualified employee in the area to holding the hearing. This shall not include the approval of sustained-yield timber units.

(c) *Cutting of timber on certain mining claims in Oregon.* Approve applications from owners of mining claims located since August 28, 1937, on revested Oregon and California Railroad and reconveyed Coos Bay Wagon Road grant lands in Oregon, to cut and use so much of the timber on the mining claims as is necessary in the development and operation of the mines until such time as the timber is otherwise disposed of by the United States pursuant to the Act of April 8, 1948 (62 Stat. 162).

(d) *Roads.* Act on matters involving the acquisition of rights-of-way and roads under the Act of July 26, 1955 (69 Stat. 374), including purchases after clearance with the Department of Justice but not including recommendations to the Attorney General for condemnation proceedings; also the approval of projects for the construction of roads to provide access to the timber on public lands subject to that act.

SEC. 1.9 *Land use.* The State Director may take the following actions:

(a) *Airports and air navigation facilities.* (1) Issue leases of public lands for public airports and permits for air navigation facilities under the Act of May 24, 1928 (49 U.S.C. section 211–214).

(2) Take all actions under the Federal Airport Act (49 U.S.C. section 1101).

(b) *Cemetery sites.* Take all actions relating to cemetery sites pursuant to 43 CFR Parts 72 and 253.

(c) *Color-of-title and riparian claims.* Take all actions relating to color-of-title and riparian claims, under 43 CFR Parts 140 and 141.

(d) *Exchanges.* Take actions subject to the title opinion of the field solicitor, in all matters relating to exchanges of lands and of timber for lands, except where the value of the selected lands or timber exceeds $250,000, and issue quitclaim deeds authorized by section 6 of the Act of April 28, 1930 (46 Stat. 257).

(e) *Homesteads.* Take all actions on homesteads pursuant to 43 CFR Parts 65, 66 and 166 to 170 inclusive.

(f) *Indian allotments.* Take all actions relating to Indian allotments with the concurrence of the Commissioner of Indian Affairs, pursuant to 43 CFR Parts 176 and 67.

(g) *Material other than forest products.* Take all actions relating to any sale or contract for the sale of material other than forest products, or the free use of materials other than forest products, under 43 CFR Part 259.

(h) *Mineral or medicinal springs.* Take all actions relating to leases of lands adjacent to mineral or medicinal springs, under the Act of March 3, 1925 (43 U.S.C. section 971).

(i) *Sites for recreational or any public purpose.* Take all actions with respect to conveyances and leases to Federal, State, Territory and local government units and to non-profit associations and corporations pursuant to 43 CFR Part 254, and to other applicable regulations and all actions in connection with the construction maintenance and disposition of recreational facilities in Alaska pursuant to the Act of May 4, 1956 (70 Stat. 130).

(j) *Public sales.* (1) Take all actions on public sales pursuant to 43 CFR Part 250, and other sales of land by competitive bidding when authorized by law.

(2) Applications by and sales to aliens, associations having an appreciable number of alien members, and corporations whose stock to an appreciable extent is held by aliens, are subject to approval by the Secretary of the Interior.

(k) *Railroad grants.* Adjust railroad grants and claims within such grants, pursuant to 43 CFR Part 273, subject to approval of the validity of the grant rights.

(l) *Reclamation and irrigation.* Take all actions on reclamation and desert-land entries, State irrigation districts, and Nevada underground water permits and entries, pursuant to 43 CFR Parts 230 to 234, inclusive; also entries, sales, and exchanges of lands in reclamation projects, pursuant to 43 CFR Chapter II, Bureau of Reclamation, or special instructions of the Secretary of the Interior, to the extent that action by the Bureau of Land Management is required.

(m) *Rights-of-way.* (1) Grant right-of-way permits and easements over public and acquired lands, including revested Oregon and California Railroad and reconveyed Coos Bay Wagon Road grant lands in Oregon and over reservations other than Indian reservations, when authorized by law, and rights-of-way over the Outer Continental Shelf purusuant to 43 CFR Part 202. However, only the Secretary of the Interior may issue an order, pursuant to 43 CFR 244.9 (m), requiring the discontinuance, without liability or expense to the United States, of the use of a right-of-way for the purpose granted.

(2) Consent to the appropriation of Federal agencies under the principles of the instructions of January 13, 1916 (44 1d 513; 43 CFR 205.13–205.15) of rights-of-way over unreserved or withdrawn lands. (See 43 CFR Part 244, footnote 1).

(n) *Small tracts.* Take all actions with respect to small tracts, under the Act of June 1, 1938 (43 U.S.C. section 682e), as amended.

(o) *Special land-use permits.* Take all actions in issuing:

(1) Special land-use permits for public lands, pursuant to 43 CFR Part 258.

(2) Special land-use permits for revested Oregon and California Railroad and reconveyed Coos Bay Wagon Road grant lands in Oregon pursuant to 43 CFR Part 115.

(3) Special land-use permits for acquired lands under the administration of the Bureau of Land Management, under the principles embodied in 43 CFR Part 258.

(4) Permits to use areas below the high-water mark of navigable waters in Alaska for occupancy purposes under the principles embodied in 43 CFR Part 258, subject to rules, regulations, and requirements of the Department of the Army respecting the navigation of such streams.

(5) Every such permit issued to a Federal agency or to a State agency or political subdivision shall be restricted to the smallest area needed for the proposed use. Not more than 50,000 acres may be included in any such permit, except that in Alaska permits may be issued to the Department of Defense for maneuver purposes for such acreages in excess of 50,000 acres and for such periods as may be deemed warranted in the circumstances. No permit may be issued under this authority where a withdrawal or a class which the Director is not authorized to make is requested.

(p) *State grants.* Take all actions on State grants and selections when authorized by law, but not including the approval of clear lists pursuant to section 2449 of the Revised Statutes (43 U.S.C. section 859).

(q) *Surface rights.* Take all actions on nonmineral applications for lands embraced in mineral permits or leases, or in applications for such permits or leases, or classified, withdrawn, or reported as valuable for any leasable mineral or lying within the geologic structure of a field, in accordance with 43 CFR Parts 102 and 66.

(r) *Townsites.* Take all actions on all townsite matters except withdrawals, including the designation of townsite trustees as provided in 43 CFR 80.2 under authority of section 11 of the Act of March 3, 1891 (26 Stat. 1099, 48 U.S.C. 355) and as provided in 43 CFR 80.19 under authority of the Act of May 25, 1926 (44 Stat. 629, 48 U.S.C. 355a–355d). Provided, that reclamation townsite matters shall be handled jointly with the Commissioner of Reclamation, pursuant to 43 CFR 255.42 to 255.45 inclusive, and 255.47.

(s) *Water wells.* Take all actions on water-well leases, pursuant to section 40 of the Mineral Leasing Act (30 U.S.C. section 229a) and 30 CFR 241.6.

(t) *Matters pertaining to Alaska only.* (1) Alaska—furfarms. Take all actions on leases of public lands in Alaska for furfarms, under the Act of July 3, 1926 (48 U.S.C. section 360, 361).

(2) Alaska, homesites or headquarters. Take all actions on homesites or headquarters in Alaska, pursuant to 43 CFR Part 64.

(3) Alaska Housing Authority. Transfer to the Alaska Housing Authority lands above high-water mark and under the jurisdiction of the Department of the Interior pursuant to section 6 of the Alaska Housing Act of April 23, 1949 (48 U.S.C. section 484c).

(4) Alaska, Matanuska Valley. Dispose of lands in the Matanuska Valley, Alaska, under the Act of October 17, 1940 (48 U.S.C. section 353 Note).

(5) Alaska Public Works. Take all actions on transfers in accordance with section 7 of the Act of August 24, 1949 (48 U.S.C. section 486e), of any interest in public lands in Alaska for any public works project which has been approved under section 4 of the act.

(6) Alaska, trade and manufacturing sites. Take all actions on trade and manufacturing sites in Alaska, pursuant to 43 CFR Part 81.

(7) Alaska missions claims. Take all actions pursuant to section 27 of the Act of June 6, 1900 (31 Stat. 330) and 50 L.D. 55.

(8) Shore space restrictions. Take all actions in connection with the waiver, pursuant to the Act of June 5, 1920, as amended (48 U.S.C. 372), and 43 CFR Part 77, of the 160 rod restriction as to the length of claims along the shores of navigable waters in Alaska.

(u) *Certificates, scrip and lieu selections.* Take all actions in connection with certificates and scrip under 43 CFR Parts 61 and 130 to 133, inclusive and also forest lieu selections, in accordance with footnote 1, to Part 130, subject to approval of the validity of the scrip or other rights.

(v) *Choctaw-Chickasaw lands.* Take all actions on matters pertaining to the management and disposition of the Choctaw-Chickasaw lands pursuant to 43 CFR Part 19.

(w) *Small holding claims.* Take all actions on claims under the act of March 3, 1891 (26 Stat. 854), as amended by the act of February 21, 1893 (27 Stat. 470); and the act of June 15, 1922 (42 Stat. 650). 1/

(x) *Mining claim occupancy.* Take all actions on claims under the act of October 23, 1962 (76 Stat. 1127) and 43 CFR, Part 260. 2/

SEC. 1.10 *Designation of Acting Officials.* The State Director may designate:

(a) *Acting State Director.* By written order, any Chief of Division or Operations Supervisor in his State to perform the functions of the State Director, in case of death, resignation, absence, or sickness, of the State Director.

(b) *Acting Chief of Division.* By written order, any qualified employee of the various staff offices to perform the functions of the Chief of Division, in case of death, resignation, absence, or sickness of the Chief of Division.

(c) *Acting Land Office Manager.* By written order, any qualified employee of the land office to perform the functions of the Land Office Manager in case of death, resignation, absence, or sickness of the Land Office Manager.

(d) *Acting District Manager.* By written order, any qualified employee of the district office to perform the functions of the District Manager, in case of death, resignation, absence, or sickness of the District Manager.

(e) No other employee may be designated by the State Director to serve as Acting State Director except with the prior approval of the Director, and each employee who serves in such capacity in (a), (b), (c), or (d) above shall prepare a memorandum to be kept in the State Office showing the date and hour of the commencement and termination of each period of his service in that capacity.

PART II—REDELEGATION TO LAND OFFICE MANAGERS

AUTHORITY IN GENERAL

SEC. 2.0 *Functions of Land Office Manager.* (a) The land office managers are authorized to perform in their respective areas of responsibility[3] and in accordance with the existing policies, regulations and procedures of this Department and under the direct supervision of the State Director,[4] the functions of the Director, Bureau of Land Management, as listed below, subject to the limitations listed in Part I together with any limitations specified below.

SEC. 2.1 *Authority to redelegate.* The land office manager may redelegate to the Chief, Minerals Section, authority to take action for the manager in matters listed in section 2.6 of Part II, and to the Chief, Lands Section, authority to take action for the manager in matters listed in section 2.9 of Part II. He may also redelegate to the Operations Manager authority to take action for the manager in matters within the Operations Manager's specified responsibility. Any order of redelegation must be approved by the State Director and published in the FEDERAL REGISTER.

AUTHORITY IN SPECIFIED MATTERS

SEC. 2.2 *General and miscellaneous matters.* The land office manager may take all actions on:

(b) Cancellations or surrenders of contracts and leases.

(c) Copies of records.

(d) Government contests.

SEC. 2.3 *Fiscal affairs.* The land office manager may take all actions on:

(a) *Bonds.* Authority limited to section 1.3(a)(1) of Part I of this order.

(c) *Repayments.*

SEC. 2.4 *Cadastral engineering.* The land office manager may take the following action:

(a)(4) Preparation and publication in the FEDERAL REGISTER of notices of the official filing of accepted plats of survey, resurvey and approved protracted survey diagrams.

---

[3] The land office manager at Billings shall also have jurisdiction in North and South Dakota. The land office manager at Cheyenne shall also have jurisdiction in Nebraska and Kansas. The land office manager at Santa Fe shall also have jurisdiction in Oklahoma and Texas.

[4] The land office manager at Spokane is under the direct supervision of the State Director of Oregon.

SEC. 2.5 *Classifications and withdrawals.* Subject to receipt of a report from the State Director, the land office manager may take all the listed actions on:

(b) Withdrawals and reservations.

(c) Restoration orders. 1/

SEC. 2.6 *Minerals.* The land office manager may take all the listed actions on:

(a) Oil and gas leases.

(b) Coal permits, leases, and licenses; asphalt leases.

(c) Oil shale leases.

(d) Phosphate leases.

(e) Potassium permits and leases.

(f) Sodium permits and leases.

(g) Sulphur permits and leases.

(h) Agreements to compensate for drainage of oil and gas.

(i) Gold, silver, and quicksilver leases.

(j) Minerals subject to lease under special laws.

(k) Mining claims.

(l) Native asphalt, solid and semisolid bitumen and bituminous rock leases. 1/

SEC. 2.7 *Range management.* The land office manager may take all actions on:

(b)(3) Grazing leases of public lands in Alaska under the act of March 4, 1927 (48 U.S.C. secs. 471, 471a–471c).

SEC. 2.9 *Land use.* Subject to classification action by the State Director where necessary, the land office manager may take all actions on:

(a) Airports and air navigation facilities.

(b) Cemetery sites.

(c) Color-of-title and riparian claims. Subject to approval of color-of-title or claim of right by the Field Solicitor.

(d) Exchanges.

(1) Authority subject to title approval of offered lands by the Field Solicitor and limited to exchanges in which the value of the selected lands does not exceed $50,000.

(e) Homesteads.

(f) Indian allotments.

(g) Material other than forest products.

(h) Mineral or medicinal springs.

(i) Sites for recreational or any public purposes.

(j) Public sales.

(k) Railroad grants.

(l) Reclamation and irrigation.

(m) Rights-of-way. Authority does not include logging road rights-of-way on public lands west of Range 8 East, Willamette Meridian, Oregon.

(n) Small tracts.

(o) Special land-use permits, except:

(1) Special land-use permits within grazing or forest districts.

(2) Special land-use permits for revested Oregon and California Railroad and reconveyed Coos Bay Wagon Road grant lands in Oregon.

(p) State grants.

(q) Surface rights.

(r) Townsites. Except designation of townsite trustees.

(s) Water wells.

(t) Matters pertaining to Alaska only. The land office manager may take all the listed actions on:

(1) Alaska, fur farms.

(2) Alaska, homesites or headquarters.

(3) Alaska, housing authority.

(4) Alaska, Matanuska Valley.

(5) Alaska public works.

(6) Alaska, trade and manufacturing sites.

(7) Alaska mission claims.

(8) Shore space restrictions.

(u) Certificates, scrip and lieu selections.

(v) Choctaw-Chickasaw lands.

(w) *Small holding claims.* 1/

(x) *Mining claim occupancy.* 2/

PART III—REDELEGATION TO DISTRICT MANAGERS

AUTHORITY IN GENERAL

SEC. 3.0 *Functions of District Manager.* (a) The district managers are authorized to perform in their respective areas of responsibility and in accordance with the existing policies, regulations and procedures of this Department, and under the direct supervision of the State Director, the functions of the Director, Bureau of Land Management, as listed below, subject to the limitations listed in Part I together with any limitations specified below.

AUTHORITY IN SPECIFIED MATTERS

SEC. 3.2 *General and miscellaneous matters.* On matters in which he is authorized to act, the district manager may take all actions on:

(b) Cancellations or surrenders of contracts.

(c) Copies of records.

SEC. 3.3 *Fiscal affairs.* On matters in which he is authorized to act, the district manager may take all actions on:

(a) *Bonds and forfeitures.* 1/

(b) Contributions, donations and refunds.

(c) Repayments.

(d) Tresspass. Determine liability and accept damages for trespass on the public lands and dispose of resources recovered in trespass cases for not less than the appraised value thereof when the amount involved does not exceed $2,000.

SEC. 3.7 *Range management.* The district manager may take all the listed actions on:

(a) Licenses and permits to graze or trail livestock.

(3) Permits or cooperative agreements to construct and maintain range improvements and determine the value of such improvements.

(4) The expenditure of funds appropriated by Congress, or contributed by individuals, associations, advisory boards, or others for the construction, purchase or maintenance of range improvements.

(b) Grazing leases.

(c) Appropriation of water.

(d) Soil and moisture conservation; control of halogeton glomeratus.

(e) Controlled brush burning. In accordance with plans and specifications approved by the State Director.

SEC. 3.8 *Forest management.* The district manager may take all the actions on:

(a) Disposition of forest products except sales of timber in excess of 10,000,000 feet board measure must be approved by State Directors or their delegates prior to advertisement.

(c) In Oregon, cutting of timber on certain mining claims.

(d) Roads.

SEC. 3.9 *Land use.* The district manager may take all the listed action on:

(g) Material other than forest products not exceeding $2,000 unless authority to make sales in greater amounts is delegated by the State Director. 3/

(m) Rights-of-way. Grant logging road rights-of-way over public land west of Range 8 East, Willamette Meridian, Oregon, and rights-of-way over public and acquired land pursuant to 43 CFR 244.53.

(o) Special land-use permits.

(1) Issue special land-use permits for public lands within the grazing and forest districts.

(2) Special land-use permits for revested Oregon and California Railroad and reconveyed Coos Bay Wagon Road grant lands in Oregon.

(3) Special land-use permits for lands outside established grazing and forest districts when specifically authorized by the State Director.

PART IV—REDELEGATIONS OF AUTHORITY TO THE CHIEF, DIVISION OF FIELD SERVICES.

AUTHORITY IN GENERAL

SEC. 4.0 *Functions of Chief, Division of Field Services.* (a) In accordance with the existing policies, regulations and procedures of this Department, and under the direct supervision of the Assistant Director—Operating Services, the Chief, Division of Field Services of the Bureau of Land Management and the Chiefs of Branches of this Division are authorized to perform in their geographical areas of jurisdiction, the functions of the Director, Bureau of Land Management, as listed in Part I of this order and irrespective of geographical limitations all authority of the Director

in the matters listed in section 4.10 of Part IV of this order unless specifically limited.

(b) Limitations. In addition to limitations on authority in specified matters, the authority delegated to the Chief, Division of Field Services shall not include:

(1) The issuance of documents which are amendments of or additions to the Code of Federal Regulations.

(2) The exercise of the supervisory powers of the Secretary, whether by way of appeal to the Secretary or otherwise.

(3) Approval of exchanges of land or of timber for land if the selected lands exceed either 2,000 acres in area or $50,000 in value unless prior clearance is obtained from the Office of the Assistant Director—Operating Services.

SEC. 4.1 *Authority to redelegate.* (a) The Chief, Division of Field Services may redelegate any authority vested in him by this order to any qualified employee in his area of jurisdiction, except the authority to appoint the acting Chief, Division of Field Services. Any order of redelegation of authority pursuant to this section must be approved by the Assistant Director—Operating Services and published in the FEDERAL REGISTER.

(b) Any authority redelegated by the Chief, Division of Field Services may, in his discretion, be exercised personally by him, notwithstanding the redelegation of authority.

AUTHORITY IN SPECIFIED MATTERS

The Chief, Division of Field Services may take all actions on matters listed in sections 1.2 through 1.9 of Part I of this order and section 4.10 subject to the limitations listed in Part I, together with any specific limitations listed below.

SEC. 4.2 *General and miscellaneous matters.* The Chief, Division of Field Services may take all actions listed under this section of Part I of this order, except:

(e) Government contests. The presentation of the Government's case at the hearing.

SEC. 4.3 *Fiscal affairs.* The Chief, Division of Field Services may take all actions listed under this section of Part I of this order, except:

(a)(2) Expend funds made available as a result of the forfeiture of a bond or deposit by a timber purchaser or permittee or of a compromise under the Public Land Administration Act (43 U.S.C. 1381).

(d)(1) Make recommendations to the U.S. Attorney for institution or compromise of suits arising out of trespass.

SEC. 4.4 *Cadastral engineering.* The Chief, Division of Field Services may take all actions listed under this section of Part I.

SEC. 4.5 *Classifications and withdrawals.* The Chief, Division of Field Services may take all actions listed under this section of Part I.

SEC. 4.6 *Minerals.* The Chief, Division of Field Services may take all actions listed under this section of Part I.

SEC. 4.7 *Range management.* The Chief, Division of Field Services may take all actions listed under this section of Part I.

SEC. 4.8 *Forest management.* The Chief, Division of Field Services may take all actions listed under this section of Part I.

SEC. 4.9 *Land use.* The Chief, Division of Field Services may take all actions on matters listed under this section of Part I except:

(d) *Exchanges.* Subject to title opinion of the Field Solicitor.

SEC. 4.10 *Miscellaneous matters.* The Chief, Division of Field Services may take the following actions:

(a) *Drainage entries.* Take all actions on Arkansas and Minnesota drainage entries, in accordance with 43 CFR Parts 117 and 118, respectively.

(b) *Amendments of entries and patents.*

(c) *Patents.* Issue patents or their equivalent for grants of land under the authority of the Government to be issued in the name of the United States, other than patents or other conveyances which require the approval or signature of the President. Patents may be signed by the Chief of the Patent Section, or in his absence, by the Acting Chief of that section.

(d) *Cash and credit system.* Take all actions on cash and credit system and preemption entries when full payment has been made.

(e) *Private land and small holding claims.* Take all actions on:

(1) Confirmed private land claims.

(2) Small holding claims.

(f) *Railroad grants.* Approve the validity of the grant rights in regard to railroad grants and claims within such grants pursuant to 43 CFR, Part 273.

(g) *Certificates, scrip and lieu selections.* Approve the validity of scrip or other rights pursuant to 43 CFR, Parts 130 to 133, inclusive.

(h) *Disposal of specified tracts.* Take all actions in regard to the disposal of specified tracts of public lands when authorized by law.

SEC. 4.11 *Designation of acting officials.* The Chief, Division of Field Services may designate:

(a) Acting Chief, Division of Field Services. By written order, any qualified employee in his office to perform the functions of the Chief, Division of Field Services, in case of death, resignation, absence, or sickness of the Chief, Division of Field Services.

(b) Each employee who serves in such capacity in (a) above, shall prepare a memorandum to be kept in the office of the Division of Field Services, showing the date and hour of the commencement and termination of each period of his service in that capacity.

PART V—REDELEGATIONS OF AUTHORITY TO THE CHIEF, DIVISION OF ENGINEERING

AUTHORITY IN GENERAL

SEC. 5.0 *Functions of Chief, Division of Engineering.* (a) In accordance with existing policies, regulations and procedures of this Department, and under the direct supervision of the Assistant Director—Operating Services, the Chief, Division of Engineering of the Bureau of Land Management is authorized to perform all functions and sign for and on behalf of the Director all documents relating to (1) appointment of mineral surveyors, (2) acceptance of all types of surveys, and (3) approval of all types of protracted surveys.

PART VI—AUTHORITY OF HEARING EXAMINERS

AUTHORITY IN GENERAL

SEC. 6.0 *Functions of hearing examiners.* (a) Hearing examiners in cases before them for hearing and decision are authorized to exercise the powers and authority enumerated in the Federal Range Code (43 CFR Part 161) or the general rules of practice (43 CFR Part 221), whichever may be applicable, or as specified in an order or decision of the Director or Secretary in any case.[4]

AUTHORITY IN SPECIFIED MATTERS

SEC. 6.1 *Reporter's fees.* Hearing examiners in accordance with 43 CFR 221.17 and 221.75, are authorized to take all actions on payments for reporter's fees required of parties to hearings, including action upon requests of parties to be relieved of such payments.

SEC. 6.2 *Copies of records.* Hearing examiners, in accordance with existing policies, regulations and procedures of this Department, are authorized to furnish copies and exemplifications of records, including their decisions and orders.

[4] The powers enumerated in Sec. 7(b) of the Administrative Procedure Act (5 U.S.C. 1001-1011 are by the terms thereof vested in the hearing examiner in any case in which the parties must be afforded opportunity for a hearing conforming with the Act.

SEC. 6.3 *Bonds.* Hearing examiners are authorized to determine the amount of any bond required pursuant to 43 CFR 185.178.

PART VII—APPEALS

SEC. 7.1 *Right of Appeal.* Any person aggrieved by the action of a State Director, Chief, Division of Field Services, hearing examiner, land office manager, district manager or their delegate may appeal to the Director, Bureau of Land Management, and from his decision to the Secretary of the Interior, pursuant to 43 CFR, Parts 161 and 221.

PART VIII—REVOCATION

Bureau of Land Management Orders No. 541, 638, and 645, as amended, are hereby revoked. Redelegations of authority pursuant to Order No. 541, not inconsistent with the delegations herein made, shall continue in force until revoked or superseded.

H. R. HOCHMUTH,
Associate Director.

Order No. 684 - August 28, 1961
(26 F.R. 8216 - August 31, 1961)

1/ Amendment No. 1 - March 7, 1962
(27 F.R. 2417 - March 14, 1962)

2/ Amendment No. 2 - May 7, 1963
(28 F.R. 4773 - May 11, 1963)

3/ Amendment No. 3 - August 8, 1963
(28 F.R. 8379 - August 15, 1963)

34846

UNITED STATES
DEPARTMENT OF THE INTERIOR
Bureau of Land Management
Washington 25, D. C.

August 8, 1963

Bureau Order No. 684, Amendment No. 3

Subject: Redelegation of Authority, Lands and Resources

Section 3.9(g) of Part III of Bureau Order No. 684 dated August 28, 1961, is further amended to read as follows:

PART III. REDELEGATION OF AUTHORITY TO DISTRICT MANAGERS.

Section 3.9 Land Use

* * * *

(g) Material other than forest products not exceeding $2,000 value: Authority to make sales in greater amounts is delegated by the State Director.

/s/ H. R. Hochmuth

Associate Director

Distribution:
Bureau Order list

MAY 7 1963

BUREAU ORDER NO. 684, AMENDMENT NO. 2

SUBJECT: Lands and Resources, Redelegation of Authority

Bureau Order No. 684 of August 28, 1961, is further amended as follows:

1. A new paragraph (x) is added to sections 1.9 and 2.9 as follows:

PART I - REDELEGATIONS OF AUTHORITY TO STATE DIRECTORS

Section 1.9 Land Use

* * ** * *

(x) Mining Claim Occupancy Take all actions on claims under the act of October 28, 1962 (76 Stat. 1127) and 43 CFR, Part 260.

PART II - REDELEGATION TO LAND OFFICE MANAGERS

Section 2.9 Land Use

* * * * *

(x) Mining Claim Occupancy

H. R. Hochmuth

Associate Director

FR, Vol. 28, No. 93
5/11/63

Notices

DEPARTMENT OF COMMERCE

Office of the Secretary

[Dept. Order 182, Amdt. 1]

BUREAU OF INTERNATIONAL COMMERCE

Organization and Function Supplement

The material appearing at 28 F.R. 1074–1077 of February 2, 1963 is amended as follows:

Section 2.01 3 is hereby amended by deleting the "British Commonwealth Division."

Section 2.01 3 shall read as follows:

SEC. 2. *Organization.* * * *

.01 The Bureau of International Commerce shall consist of the following organization units:

* * * * *

3 Office of International Regional Economics:

Africa Division.
American Republics Division.
European Division.
Far Eastern Division.
Near East-South Asia Division.
Sino-Soviet Division.
International Trade Analysis Division.

Effective date: April 30, 1963.

HERBERT W. KLOTZ,
Assistant Secretary for Administration.

[F.R. Doc. 63-5063; Filed, May 10, 1963; 8:45 a.m.]

DEPARTMENT OF THE INTERIOR

Bureau of Land Management

[Bureau Order No. 684, Amdt. 2]

LANDS AND RESOURCES

Redelegation of Authority

MAY 7, 1963.

Bureau Order No. 684 of August 28, 1961, is further amended as follows:

1. A new paragraph (x) is added to sections 1.9 and 2.9 as follows:

PART I—REDELEGATIONS OF AUTHORITY TO STATE DIRECTORS

SEC. 1.9 *Land use.* * * *

(x) *Mining claim occupancy.* Take all actions on claims under the act of October 28, 1962 (76 Stat. 1127) and 43 CFR, Part 260.

PART II—REDELEGATION TO LAND OFFICE MANAGERS

SEC. 2.9 *Land use.* * * *

(x) *Mining claim occupancy.*

H. R. HOCHMUTH,
Associate Director.

[F.R. Doc. 63-5084; Filed, May 10, 1963; 8:47 a.m.]

Office of the Secretary

R. F. BOVIER

Statement of Changes in Financial Interests

In accordance with the requirements of section 710(b)(6) of the Defense Production Act of 1950, as amended, and Executive Order 10647 of November 28, 1955, the following changes have taken place in my financial interests during the past six months:

(1) Pennsylvania Electric Company, Vice President; Saxton Nuclear Experimental Corporation, Vice President (both previously listed).
(2) General Public Utilities Corp. (previously listed), Investors Mutual Co. (previously listed), Glickman Co. (previously listed), Standard Pressed Steel Co. (previously listed), Lone Star Steel Co. (previously listed).
(3) None.
(4) None.

This statement is made as of April 24, 1963.

Dated: April 24, 1963.

R. F. BOVIER.

[F.R. Doc. 63-5105; Filed, May 10, 1963; 8:50 a.m.]

LEMORE W. CLARK

Statement of Changes in Financial Interests

In accordance with the requirements of section 710(b)(6) of the Defense Production Act of 1950, as amended, and Executive Order 10647 of November 28, 1955, the following changes have taken place in my financial interests during the past six months:

(1) No changes.
(2) No changes.
(3) No changes.
(4) No changes.

This statement is made as of April 25, 1963.

Dated: April 25, 1963.

LEMORE W. CLARK.

[F.R. Doc. 63-5106; Filed, May 10, 1963; 8:50 a.m.]

WALTER FRED NELSON

Statement of Changes in Financial Interests

In accordance with the requirements of section 710(b)(6) of the Defense Production Act of 1950, as amended, and Executive Order 10647 of November 28, 1955, the following changes have taken place in my financial interests during the past six months:

(1) None
(2) None
(3) None
(4) None

This statement is made as of April 18, 1963.

Dated: April 18, 1963.

WALTER FRED NELSON.

[F.R. Doc. 63-5107; Filed, May 10, 1963; 8:50 a.m.]

GEORGE L. WILKINS

Statement of Changes in Financial Interests

In accordance with the requirements of section 710(b)(6) of the Defense Production Act of 1950, as amended, and Executive Order 10647 of November 28, 1955, the following changes have taken place in my financial interests during the past six months:

(1) None.
(2) None.
(3) None.
(4) None.

This statement is made as of April 1, 1963.

Dated: May 1, 1963.

GEO. L. WILKINS.

[F.R. Doc. 63-5108; Filed, May 10, 1963; 8:50 a.m.]

DEPARTMENT OF AGRICULTURE

Agricultural Research Service

IDENTIFICATION OF CARCASSES OF CERTAIN HUMANELY SLAUGHTERED LIVESTOCK

Supplemental List of Humane Slaughterers

Pursuant to section 4 of the Act of August 27, 1958 (7 U.S.C. 1904) and the statement of policy thereunder in 9 CFR Part 181.1 the following table lists additional establishments operated under Federal inspection under the Meat Inspection Act (21 U.S.C. 71 et seq.) which have been officially reported as humanely slaughtering and handling the species of livestock respectively designated for such establishments in the table. This list supplements the list previously published under the Act (28 F.R. 4588) for April and represents those establishments and species which were reported too late to be included in the earlier list or which have come into compliance with respect to species indicated since the completion of the reports on which the earlier list was based. The establishment number given with the name of the establishment is branded on each carcass of livestock inspected at that establishment. The table should not be understood to indicate that all species of livestock slaughtered at a listed establishment are slaughtered and handled by humane methods unless all species are listed for that establishment

23

(190)

Revoked by #701, amdt. 8, dated 6/18/69. 2)

Zarlenga

DEPARTMENT OF THE INTERIOR

Bureau of Land Management

(Bureau Order No. 684 and Amendment No. 1)

LANDS AND RESOURCES [1]

Redelegations of Authorities

AUGUST 28, 1961.

PART I—REDELEGATIONS OF AUTHORITY IN STATE DIRECTORS

AUTHORITY IN GENERAL

Redelegations of authorities concerned with lands and resources.

SECTION 1.0 *Functions of the State Director.* (a) The State Directors of the Bureau of Land Management are authorized to perform in their respective states [2] and in accordance with existing policies, regulations, and procedures of this Department, the functions of the Director, Bureau of Land Management, listed in Part I of this order, including all types of actions in the matters listed, unless specifically limited.

(b) Limitations. In addition to limitations on authority in specified matters, the authority delegated to the State Director shall not include:

(1) The issuance of documents which are amendments of or additions to the Code of Federal Regulations.

(2) The exercise of the supervisory powers of the Secretary, whether by way of appeal to the Secretary or otherwise.

(3) The issuance of patents or their equivalent.

(4) Approval of exchanges of land or of timber for land if the selected lands exceed $50,000 in value unless prior clearance is obtained from the Director's Office. 1/

SEC. 1.1 *Authority to redelegate.* (a) Each State Director may redelegate or authorize the redelegation of any authority vested in him by this order to any qualified employee under his jurisdiction, except the authority to appoint acting State Directors. Any order of redelegation of authority pursuant to this section must be approved by the Director, Bureau of Land Management and published in the FEDERAL REGISTER, except that:

(1) The State Director may without such approval redelegate to any qualified employee on his immediate staff authority to take actions on behalf of the State Director in matters listed in sections 1.2 through 1.9 of Part I (according to the staff member's functional responsibilities).

(b) Any authority redelegated by the State Director may, in his discretion, be exercised personally by him notwithstanding the redelegation of authority.

AUTHORITY IN SPECIFIED MATTERS

SEC. 1.2 *General and miscellaneous matters.* The State Director may take the following actions, where he has authority in matters listed under other sections of this order:

(a) *Oaths.* Authorize any employee designated to make investigations of matters under the jurisdiction of the Bureau to administer any oath, affirmation, affidavit or deposition provided under the act of October 14, 1940 (5 U.S.C. 498), whenever necessary in the performance of such employee's official duties.

(b) *Cancellations or surrenders of contracts, leases, and permits.* Make partial or complete cancellations or accept surrenders of contracts, leases, and permits.

(c) *Copies of records.* Furnish copies and exemplifications of patents, plats, and other records.

(d) *Gifts.* Accept on behalf of the United States any lands within or without a grazing district as a gift, where such action will promote the purposes of the district or facilitate the administration of the public lands, pursuant to section 8a of the Taylor Grazing Act, as amended (43 U.S.C. section 315g).

(e) *Government contests.* Initiate Government contests against claims asserted to public lands, and take all necessary actions involving the prosecution of such contests except the presentation of the Government's case at the hearing.

(f) *Reports and certifications in connection with Federal land highway projects.* Make reports and certifications as to public lands, in connection with Federal land highway projects, required by (23 U.S.C. 202c).

(g) *Pro-rata road use and maintenance deposits.* Require a user or users of roads or trails to maintain such roads or trails on a pro-rata basis or to accept deposits to provide for such maintenance and to expend such deposited funds for the maintenance of any road or trail under the jurisdiction of the Bureau (43 U.S.C. 1382).

---

[1] Authority source—Department Order as amended.

[2] The State Director for Montana shall also have jurisdiction in the States of North and South Dakota. The State Director for Wyoming shall also have jurisdiction in the States of Nebraska and Kansas. The State Director for New Mexico shall also have jurisdiction in the States of Oklahoma and Texas. The State Director for Oregon shall also have jurisdiction in the State of Washington.

See Page 7

(h) *Cooperative agreements.* May enter into cooperative agreements involving the improvement, management, use and protection of the public lands and their resources under his jurisdiction as provided in the Public Land Administration Act (43 U.S.C. 1363). May enter into Cooperative Agreements under sections 2, 9 and 12 of the June 28, 1934 act (43 U.S.C. 315 et seq.) and under the Act of March 29, 1928 (45 Stat. 380).

Cooperative agreements not clearly within the scope of existing Bureau policies and procedures shall have advance clearance of the Director's office.

(i) *Studies.* May conduct studies, investigations, and experiments, on his own initiative or in cooperation with others, involving the improvement, management, use and protection of the public lands and their resources under his jurisdiction as provided in the Public Land Administration Act (43 U.S.C. 1362).

(j) *Fire protection.* Make contracts and cooperative agreements with Federal, State, County, Municipal and private fire-control organizations for the protection from fire (prevention, presuppression, and suppression) of the public lands under the jurisdiction of the Bureau of Land Management.

SEC. 1.3 *Fiscal affairs.* The State Director may take the following actions:

(a) *Bonds and forfeitures.* (1) Take all actions on bonds required in connection with matters pertaining to the lands or the resources thereof under his jurisdiction.

(2) Expend funds made available as a result of the forfeiture of a bond or deposit by a timber purchaser or permittee or of a compromise under the Public Land Administration Act (43 U.S.C. 1381).

(b) *Contributions, donations, and refunds.* (1) Accept contributions or donations of money, services and property for the improvement, management, use and protection of the public lands and their resources under his jurisdiction. Also accept contributions for cadastral surveying performed on federally controlled or intermingled lands under the Public Land Administration Act (43 U.S.C. 1364).

(2) Accept contributions toward the administration, protection and improvements of lands within or without grazing districts and remit or refund any unappropriated balances of such contributions pursuant to section 9 of the Taylor Grazing Act (43 U.S.C. section 315h).

(c) *Repayment.* Make repayment or refund from applicable funds in any case where payment has been made that is not required or is in excess of the amount required under the Public Land Administration Act (43 U.S.C. 1374); and repayments under 43 CFR Part 217.

(d) *Trespass.* Determine liability and accept damages for trespass on the public lands, and dispose of resources recovered in trespass cases for not less than the appraised value thereof; recommend to the United States Attorney:

(1) Institution of suits arising out of trespass where the money judgment sought is not in excess of $1,000, and

(2) compromise of such suits where the amount is not in excess of $500.

SEC. 1.4 *Cadastral engineering.* The State Director may take the following actions:

(a) *Survey.* (1) Perform all functions pertaining to the survey and resurvey of the public lands under his jurisdiction pursuant to section 453 of the Revised Statutes (43 U.S.C. section 2) except the acceptance of plats of survey, resurvey and the approval of protracted survey diagrams.

(2) Recommend to the Director for appointment mineral surveyors found to be competent pursuant to section 2334 of the Revised Statutes (30 U.S.C. section 39).

(3) Approve plats and field notes of mineral surveys and certification as to expenditures pursuant to 43 CFR 185.43.

(4) Prepare and publish in the FEDERAL REGISTER notices of the official filing of accepted plats of survey, resurvey and approved protracted survey diagrams.

SEC. 1.5 *Classifications and withdrawals.* The State Director may take the following actions:

(a) *Classification of lands.* Classify public lands under section 7 of the Taylor Grazing Act of June 28, 1934, as amended (43 U.S.C. 315f), or pursuant to other laws.

(b) *Withdrawals and reservations.* (1) Act on matters pertaining to the withdrawals or reservation of Federal lands and the elimination of such lands from withdrawal or reservation pursuant to 43 CFR Part 295, including determinations pursuant to section 3(d) of the Federal Property and Administrative Services Act of 1949 as amended (40 U.S.C. 472d) except the authority to issue orders of withdrawal or reservation and orders eliminating lands from withdrawal or reservation. 1/

(2) Determine pursuant to 43 CFR Part 295 with the concurrences of the Administrator of General Services or his delegate when required that specific lands withdrawn or reserved from the public domain and subsequently declared excess to the needs of the agency for which withdrawn or reserved are suitable or not suitable for return to the public domain for disposition under the general public land laws.

(3) Determine that minerals in lands or portions of lands withdrawn or reserved from the public domain and subsequently declared excess to the needs of the agency for which withdrawn or reserved are suitable or not suitable for disposition under the public land mining and mineral leasing laws.

(c) *Restoration orders.* Issue orders of restoration where revocation or modification of a withdrawal or reservation is not involved and where an order of revocation provides for opening of the lands by an authorized officer of the Bureau. All such orders shall be published in the FEDERAL REGISTER. 1/

SEC. 1.6 *Minerals.* The State Director may take the following actions:

(a) *Oil and gas leases.* Act on oil and gas leases pursuant to the Act of February 25, 1920 (30 U.S.C. section 221 et seq.), as amended and supplemented, the Act of August 7, 1947 (30 U.S.C. sections 351–359), and the Act of May 21, 1930 (30 U.S.C. sections 301–305), and oil and gas leases issued pursuant to the Act of August 21, 1916 (39 Stat. 519), embracing lands restored to the public domain pursuant to the provisions of the Act of August 15, 1953 (67 Stat. 592). Also leases of oil and gas deposits transferred to this Department for measures to protect the deposits from drainage. This authority does not include any function pertaining to oil and gas deposits that involve approval or execution of unit or cooperative agreements, communization agreements, operating, drilling or development contracts without regard to acreage limitation or the sale of royalty oil taken in account of production.

(b) *Coal permits, leases, and licenses, asphalt leases.* (1) Act on all matters involving coal permits, leases, and licenses under sections 2 to 8 inclusive, of the Act of February 25, 1920, as amended and supplemented (30 U.S.C. sections 201–208), including coal permits and leases under the Act of August 7, 1947 (30 U.S.C. section 351–359), and coal permits and leases and asphalt leases under the Acts of June 26, 1944 (58 Stat. 483–485), June 24, 1948 (62 Stat. 596), and May 24, 1949 (63 Stat. 75).

(2) The authority delegated by this section shall not include any function relating to the grant, approval or termination of the waiver, suspension, or reduction of rental or minimum royalty, the reduction of royalty, or this suspension of operations and production under a lease.

(c) *Oil shale leases.* Take all actions on oil shale leases under section 21 of the Act of February 25, 1920 (30 U.S.C. section 241), and under the Act of August 7, 1947 (30 U.S.C. section 351–359). The authority delegated by this section shall not include any function relating to the grant, approval or termination of the waiver, suspension or reduction of rental or minimum royalty, the reduction of royalty, or the suspension of operations and production under a lease.

(d) *Phosphate permit and leases.* Take all actions on matters related to phosphate permits and leases under sections 9 to 12 inclusive, of the Act of February 25, 1920 (30 U.S.C. 211–214), as amended, and phosphate permits and leases under the Act of August 7, 1947 (30 U.S.C. 351–359).

(e) *Potassium permits and leases.* Take all actions on matters related to potassium permits and leases under the Act of February 7, 1927 (30 U.S.C. sections 281–285), as amended and potassium permits and leases under the Act of August 7, 1947 (30 U.S.C. 351–359).

(f) *Sodium permits and leases.* Take all actions on sodium permits, leases and use permits under sections 23 to 25 inclusive, of the Act of February 25, 1920, as amended (30 U.S.C. sections 261–263), and under the Act of August 7, 1947 (30 U.S.C. sections 351–359).

(g) *Sulphur permits and leases.* Take all actions on sulphur permits and leases under the Act of April 17, 1926, as amended (30 U.S.C. section 271), and under the Act of August 7, 1947 (30 U.S.C. sections 351–359).

(h) *Agreements to compensate for drainage of oil or gas.* Execute agreements for payment of compensatory royalties because of drainage of oil or gas.

(i) *Gold, silver, and quicksilver leases.* Take all actions on leases of gold, silver, and quicksilver to the owners of confirmed private land claims, pursuant to 43 CFR Part 187.

(j) *Minerals subject to lease under special laws.* Take all actions on permits and leases for sand, gravel, and other minerals under special laws, pursuant to 43 CFR Part 199; also permits and leases for certain mineral deposits in acquired lands, pursuant to 43 CFR 200.31, et seq.

(k) *Mining claims.* Take all actions on claims pursuant to the general mining laws and laws supplemental thereto and 43 CFR Parts 69, 185, and 186.

(l) *Native asphalt, solid and semisolid bitumen and bituminous rock leases.* Take all action on matters related to the leasing of native asphalt, solid and semisolid bitumen and bituminous rock, including oil impregnated rock or sands from which oil is recoverable only by special treatment after the deposit is mined or quarried, pursuant to the Mineral Leasing Act of February 25, 1920, as amended (30 U.S.C. sections 181–263). 1/

SEC. 1.7 *Range management.* The State Director may exercise the following authority:

(a) *Grazing district administration.* Act on matters pertaining to the administration of grazing districts pursuant to the Act of June 28, 1934, as amended and supplemented (43 U.S.C. section 315 et seq., 16 U.S.C. section 715i), and 43 CFR Parts 161, 163, and 165 as follows:

(1) Licenses or permits to graze or trail livestock.

(2) Permits or cooperative agreements to construct and maintain range improvements and determine the value of such improvements.

(3) The expenditure of funds appropriated by the Congress, or contributed by individuals, associations, advisory boards, or others, for the construction, purchase or maintenance of range improvements.

(4) Leases under the Pierce Act (43 U.S.C. sections 315m–1 to 315m–4 inclusive).

(5) Requirements of field employees to furnish horses and miscellaneous equipment necessary for the performance of their official duties, pursuant to the Act of December 10, 1942 (43 U.S.C. section 315o–2), and make payments in connection therewith as authorized by the act.

(6) Hold hearings when necessary in connection with the modification of grazing district boundaries.

(7) Approve articles of incorporation, constitutions, and bylaws for local associations of stockmen pursuant to 43 CFR Part 161.

(b) *Grazing leases.* (1) Grazing leases of public lands, under section 15 of the Act of June 28, 1934, as amended (43 U.S.C. section 315m), and the permits or cooperative agreements to construct and maintain improvements on lands so leased, and to determine the value of such improvements.

(2) Grazing leases of the revested Oregon and California Railroad and the reconveyed Coos Bay Wagon Road grant lands in Oregon, and crossing permits for such lands, in accordance with 43 CFR Part 115.

(3) Grazing leases of public lands in Alaska, under the Act of March 4, 1927 (43 U.S.C. sections 471, 471a–471c); leases and permits for grazing of reindeer pursuant to section 14 of the Act of September 1, 1937 (50 Stat. 902; 48 U.S.C. 250m).

(c) *Appropriation of water.* Applications under State laws to appropriate water on lands under the administration of the Bureau of Land Management where required in connection with projects for the development, control or utilization of water; and procurement of easements or rights-of-way upon or over private lands, and also upon or over federally-owned lands not under the administration of the Bureau and upon or over State, county, and municipally owned lands where improvements are installed.

(d) *Soil and moisture conservation; control of Halogeton glomeratus.* (1) Soil and moisture conservation on the public lands, pursuant to the National Soil Conservation Act of April 27, 1935 (16 U.S.C. section 590a, et seq.).

(2) Surveys and other operations and the expenditure of appropriated funds and contributions, under the Halogeton Glomeratus Control Act of July 14, 1952 (66 Stat. 597), and Departmental Order No. 2835 of October 2, 1958.

(3) The authority granted by paragraphs (1) and (2) shall include authority to enter into cooperative agreements in the matters listed and shall be subject to the coordination and general supervision of the Office of the Secretary.

(e) *Controlled brush burning.* Issue permits for the controlled burning of brush, as a means of improving the range by the replacement of the brush with grass and other desirable species.

SEC. 1.8 *Forest management.* The State Director may take the following actions:

(a) *Disposition of forest products.* (1) Dispose of or permit the free use of forest products when authorized by law on lands under the jurisdiction of the Bureau of Land Management. This authority shall not include the approval of any sale of timber in excess of 25,000,000 feet, board measure.

(2) Sell timber on lands under the jurisdiction of the Bureau of Reclamation, in accordance with Department Order No. 2533 of September 7, 1949.

(b) *Hearings in connection with sustained-yield forest units.* Schedule and hold public hearings on master forest units and their appurtenant marketing areas, and on sustained-yield forest units, comprising revested Oregon and California Railroad and reconveyed Coos Bay Wagon Road grant lands in Oregon, and lands in private ownership or controlled by other public agencies, under authority of the Act of August 28, 1937 (50 Stat. 874), and (16 U.S.C. sections 383a–388i). The notice of hearing may designate any qualified employee in the area to holding the hearing. This shall not include the approval of sustained-yield timber units.

(c) *Cutting of timber on certain mining claims in Oregon.* Approve applications from owners of mining claims located since August 28, 1937, on revested Oregon and California Railroad and reconveyed Coos Bay Wagon Road grant lands in Oregon, to cut and use so much of the timber on the mining claims as is necessary in the development and operation of the mines until such time as the timber is otherwise disposed of by the United States pursuant to the Act of April 8, 1948 (62 Stat. 162).

(d) *Roads.* Act on matters involving the acquisition of rights-of-way and roads under the Act of July 26, 1955 (69 Stat. 374), including purchases after clearance with the Department of Justice but not including recommendations to the Attorney General for condemnation proceedings; also the approval of projects for the construction of roads to provide access to the timber on public lands subject to that act.

SEC. 1.9 *Land use.* The State Director may take the following actions:

(a) *Airports and air navigation facilities.* (1) Issue leases of public lands for public airports and permits for air navigation facilities under the Act of May 24, 1928 (49 U.S.C. section 211–214).

(2) Take all actions under the Federal Airport Act (49 U.S.C. section 1101).

(b) *Cemetery sites.* Take all actions relating to cemetery sites pursuant to 43 CFR Parts 72 and 253.

(c) *Color-of-title and riparian claims.* Take all actions relating to color-of-title and riparian claims, under 43 CFR Parts 140 and 141.

(d) *Exchanges.* Take actions subject to the title opinion of the field solicitor, in all matters relating to exchanges of lands and of timber for lands, except where the value of the selected lands or timber exceeds $250,000, and issue quitclaim deeds authorized by section 6 of the Act of April 28, 1930 (46 Stat. 257).

(e) *Homesteads.* Take all actions on homesteads pursuant to 43 CFR Parts 65, 66 and 166 to 170 inclusive.

(f) *Indian allotments.* Take all actions relating to Indian allotments with the concurrence of the Commissioner of Indian Affairs, pursuant to 43 CFR Parts 176 and 67.

(g) *Material other than forest products.* Take all actions relating to any sale or contract for the sale of material other than forest products, or the free use of materials other than forest products, under 43 CFR Part 259.

(h) *Mineral or medicinal springs.* Take all actions relating to leases of lands adjacent to mineral or medicinal springs, under the Act of March 3, 1925 (43 U.S.C. section 971).

(i) *Sites for recreational or any public purpose.* Take all actions with respect to conveyances and leases to Federal, State, Territory and local government units and to non-profit associations and corporations pursuant to 43 CFR Part 254, and to other applicable regulations and all actions in connection with the construction maintenance and disposition of recreational facilities in Alaska pursuant to the Act of May 4, 1956 (70 Stat. 130).

(j) *Public sales.* (1) Take all actions on public sales pursuant to 43 CFR Part 250, and other sales of land by competitive bidding when authorized by law.

(2) Applications by and sales to aliens, associations having an appreciable number of alien members, and corporations whose stock to an appreciable extent is held by aliens, are subject to approval by the Secretary of the Interior.

(k) *Railroad grants.* Adjust railroad grants and claims within such grants, pursuant to 43 CFR Part 273, subject to approval of the validity of the grant rights.

(l) *Reclamation and irrigation.* Take all actions on reclamation and desert-land entries, State irrigation districts, and Nevada underground water permits and entries, pursuant to 43 CFR Parts 230 to 234, inclusive; also entries, sales, and exchanges of lands in reclamation projects, pursuant to 43 CFR Chapter II, Bureau of Reclamation, or special instructions of the Secretary of the Interior, to the extent that action by the Bureau of Land Management is required.

(m) *Rights-of-way.* (1) Grant right-of-way permits and easements over public and acquired lands, including revested Oregon and California Railroad and reconveyed Coos Bay Wagon Road grant lands in Oregon and over reservations other than Indian reservations, when authorized by law, and rights-of-way over the Outer Continental Shelf purusuant to 43 CFR Part 202. However, only the Secretary of the Interior may issue an order, pursuant to 43 CFR 244.9 (m), requiring the discontinuance, without liability or expense to the United States, of the use of a right-of-way for the purpose granted.

(2) Consent to the appropriation of Federal agencies under the principles of the instructions of January 13, 1916 (44 1d 513; 43 CFR 205.13–205.15) of rights-of-way over unreserved or withdrawn lands. (See 43 CFR Part 244, footnote 1).

(n) *Small tracts.* Take all actions with respect to small tracts, under the Act of June 1, 1938 (43 U.S.C. section 682e), as amended.

(o) *Special land-use permits.* Take all actions in issuing:

(1) Special land-use permits for public lands, pursuant to 43 CFR Part 258.

(2) Special land-use permits for revested Oregon and California Railroad and reconveyed Coos Bay Wagon Road grant lands in Oregon pursuant to 43 CFR Part 115.

(3) Special land-use permits for acquired lands under the administration of the Bureau of Land Management, under the principles embodied in 43 CFR Part 258.

(4) Permits to use areas below the high-water mark of navigable waters in Alaska for occupancy purposes under the principles embodied in 43 CFR Part 258, subject to rules, regulations, and requirements of the Department of the Army respecting the navigation of such streams.

(5) Every such permit issued to a Federal agency or to a State agency or political subdivision shall be restricted to the smallest area needed for the proposed use. Not more than 50,000 acres may be included in any such permit, except that in Alaska permits may be issued to the Department of Defense for maneuver purposes for such acreages in excess of 50,000 acres and for such periods as may be deemed warranted in the circumstances. No permit may be issued under this authority where a withdrawal or a class which the Director is not authorized to make is requested.

(p) *State grants.* Take all actions on State grants and selections when authorized by law, but not including the approval of clear lists pursuant to section 2449 of the Revised Statutes (43 U.S.C. section 859).

(q) *Surface rights.* Take all actions on nonmineral applications for lands embraced in mineral permits or leases, or in applications for such permits or leases, or classified, withdrawn, or reported as valuable for any leasable mineral or lying within the geologic structure of a field, in accordance with 43 CFR Parts 102 and 66.

(r) *Townsites.* Take all actions on all townsite matters except withdrawals, including the designation of townsite trustees as provided in 43 CFR 80.2 under authority of section 11 of the Act of March 3, 1891 (26 Stat. 1099, 48 U.S.C. 355) and as provided in 43 CFR 80.19 under authority of the Act of May 25, 1926 (44 Stat. 629, 48 U.S.C. 355a–355d). Provided, that reclamation townsite matters shall be handled jointly with the Commissioner of Reclamation, pursuant to 43 CFR 255.42 to 255.45 inclusive, and 255.47.

(s) *Water wells.* Take all actions on water-well leases, pursuant to section 40 of the Mineral Leasing Act (30 U.S.C. section 229a) and 30 CFR 241.6.

(t) *Matters pertaining to Alaska only.* (1) Alaska—furfarms. Take all actions on leases of public lands in Alaska for furfarms, under the Act of July 3, 1926 (48 U.S.C. section 360, 361).

(2) Alaska, homesites or headquarters. Take all actions on homesites or headquarters in Alaska, pursuant to 43 CFR Part 64.

(3) Alaska Housing Authority. Transfer to the Alaska Housing Authority lands above high-water mark and under the jurisdiction of the Department of the Interior pursuant to section 6 of the Alaska Housing Act of April 23, 1949 (48 U.S.C. section 484c).

(4) Alaska, Matanuska Valley. Dispose of lands in the Matanuska Valley, Alaska, under the Act of October 17, 1940 (48 U.S.C. section 353 Note).

(5) Alaska Public Works. Take all actions on transfers in accordance with section 7 of the Act of August 24, 1949 (48 U.S.C. section 486e), of any interest in public lands in Alaska for any public works project which has been approved under section 4 of the act.

(6) Alaska, trade and manufacturing sites. Take all actions on trade and manufacturing sites in Alaska, pursuant to 43 CFR Part 81.

(7) Alaska missions claims. Take all actions pursuant to section 27 of the Act of June 6, 1900 (31 Stat. 330) and 50 L.D. 55.

(8) Shore space restrictions. Take all actions in connection with the waiver, pursuant to the Act of June 5, 1920, as amended (48 U.S.C. 372), and 43 CFR Part 77, of the 160 rod restriction as to the length of claims along the shores of navigable waters in Alaska.

(u) *Certificates, scrip and lieu selections.* Take all actions in connection with certificates and scrip under 43 CFR Parts 61 and 130 to 133, inclusive and also forest lieu selections, in accordance with footnote 1, to Part 130, subject to approval of the validity of the scrip or other rights.

(v) *Choctaw-Chickasaw lands.* Take all actions on matters pertaining to the management and disposition of the Choctaw-Chickasaw lands pursuant to 43 CFR Part 19.

(w) *Small holding claims.* Take all actions on claims under the act of March 3, 1891 (26 Stat. 854), as amended by the act of February 21, 1893 (27 Stat. 470); and the act of June 15, 1922 (42 Stat. 650). 1/

SEC. 1.10 *Designation of Acting Officials.* The State Director may designate:

(a) *Acting State Director.* By written order, any Chief of Division or Operations Supervisor in his State to perform the functions of the State Director, in case of death, resignation, absence, or sickness, of the State Director.

(b) *Acting Chief of Division.* By written order, any qualified employee of the various staff offices to perform the functions of the Chief of Division, in case of death, resignation, absence, or sickness of the Chief of Division.

(c) *Acting Land Office Manager.* By written order, any qualified employee of the land office to perform the functions of the Land Office Manager in case of death, resignation, absence, or sickness of the Land Office Manager.

(d) *Acting District Manager.* By written order, any qualified employee of the district office to perform the functions of the District Manager, in case of death, resignation, absence, or sickness of the District Manager.

(e) No other employee may be designated by the State Director to serve as Acting State Director except with the prior approval of the Director, and each employee who serves in such capacity in (a), (b), (c), or (d) above shall prepare a memorandum to be kept in the State Office showing the date and hour of the commencement and termination of each period of his service in that capacity.

Part II—Redelegation to Land Office Managers

AUTHORITY IN GENERAL

Sec. 2.0 *Functions of Land Office Manager.* (a) The land office managers are authorized to perform in their respective areas of responsibility[3] and in accordance with the existing policies, regulations and procedures of this Department and under the direct supervision of the State Director,[4] the functions of the Director, Bureau of Land Management, as listed below, subject to the limitations listed in Part I together with any limitations specified below.

Sec. 2.1 *Authority to redelegate.* The land office manager may redelegate to the Chief, Minerals Section, authority to take action for the manager in matters listed in section 2.6 of Part II, and to the Chief, Lands Section, authority to take action for the manager in matters listed in section 2.9 of Part II. He may also redelegate to the Operations Manager authority to take action for the manager in matters within the Operations Manager's specified responsibility. Any order of redelegation must be approved by the State Director and published in the Federal Register.

AUTHORITY IN SPECIFIED MATTERS

Sec. 2.2 *General and miscellaneous matters.* The land office manager may take all actions on:

(b) Cancellations or surrenders of contracts and leases.

(c) Copies of records.

(d) Government contests.

Sec. 2.3 *Fiscal affairs.* The land office manager may take all actions on:

(a) *Bonds.* Authority limited to section 1.3(a)(1) of Part I of this order.

(c) *Repayments.*

Sec. 2.4 *Cadastral engineering.* The land office manager may take the following action:

(a)(4) Preparation and publication in the Federal Register of notices of the official filing of accepted plats of survey, resurvey and approved protracted survey diagrams.

[3] The land office manager at Billings shall also have jurisdiction in North and South Dakota. The land office manager at Cheyenne shall also have jurisdiction in Nebraska and Kansas. The land office manager at Santa Fe shall also have jurisdiction in Oklahoma and Texas.

[4] The land office manager at Spokane is under the direct supervision of the State Director of Oregon.

Sec. 2.5 *Classifications and withdrawals.* Subject to receipt of a report from the State Director, the land office manager may take all the listed actions on:

(b) Withdrawals and reservations.

(c) Restoration orders. 1/

Sec. 2.6 *Minerals.* The land office manager may take all the listed actions on:

(a) Oil and gas leases.

(b) Coal permits, leases, and licenses; asphalt leases.

(c) Oil shale leases.

(d) Phosphate leases.

(e) Potassium permits and leases.

(f) Sodium permits and leases.

(g) Sulphur permits and leases.

(h) Agreements to compensate for drainage of oil and gas.

(i) Gold, silver, and quicksilver leases.

(j) Minerals subject to lease under special laws.

(k) Mining claims.

(l) Native asphalt, solid and semisolid bitumen and bituminous rock leases. 1/

Sec. 2.7 *Range management.* The land office manager may take all actions on:

(b)(3) Grazing leases of public lands in Alaska under the act of March 4, 1927 (48 U.S.C. secs. 471, 471a–471c).

Sec. 2.9 *Land use.* Subject to classification action by the State Director where necessary, the land office manager may take all actions on:

(a) Airports and air navigation facilities.

(b) Cemetery sites.

(c) Color-of-title and riparian claims. Subject to approval of color-of-title or claim of right by the Field Solicitor.

(d) Exchanges.

(1) Authority subject to title approval of offered lands by the Field Solicitor and limited to exchanges in which the value of the selected lands does not exceed $50,000.

(e) Homesteads.

(f) Indian allotments.

(g) Material other than forest products.

(h) Mineral or medicinal springs.

(i) Sites for recreational or any public purposes.

(j) Public sales.

(k) Railroad grants.

(l) Reclamation and irrigation.

(m) Rights-of-way. Authority does not include logging road rights-of-way on public lands west of Range 8 East, Willamette Meridian, Oregon.

(n) Small tracts.

(o) Special land-use permits, except:

(1) Special land-use permits within grazing or forest districts.

(2) Special land-use permits for revested Oregon and California Railroad and reconveyed Coos Bay Wagon Road grant lands in Oregon.

(p) State grants.

(q) Surface rights.

(r) Townsites. Except designation of townsite trustees.

(s) Water wells.

(t) Matters pertaining to Alaska only. The land office manager may take all the listed actions on:

(1) Alaska, fur farms.

(2) Alaska, homesites or headquarters.

(3) Alaska, housing authority.

(4) Alaska, Matanuska Valley.

(5) Alaska public works.

(6) Alaska, trade and manufacturing sites.

(7) Alaska mission claims.

(8) Shore space restrictions.

(u) Certificates, scrip and lieu selections.

(v) Choctaw-Chickasaw lands.

(w) *Small holding claims.* 1/

PART III—REDELEGATION TO DISTRICT MANAGERS

AUTHORITY IN GENERAL

SEC. 3.0 *Functions of District Manager.* (a) The district managers are authorized to perform in their respective areas of responsibility and in accordance with the existing policies, regulations and procedures of this Department, and under the direct supervision of the State Director, the functions of the Director, Bureau of Land Management, as listed below, subject to the limitations listed in Part I together with any limitations specified below.

AUTHORITY IN SPECIFIED MATTERS

SEC. 3.2 *General and miscellaneous matters.* On matters in which he is authorized to act, the district manager may take all actions on:

(b) Cancellations or surrenders of contracts.

(c) Copies of records.

SEC. 3.3 *Fiscal affairs.* On matters in which he is authorized to act, the district manager may take all actions on:

(a) *Bonds and forfeitures.* 1/

(b) Contributions, donations and refunds.

(c) Repayments.

(d) Tresspass. Determine liability and accept damages for trespass on the public lands and dispose of resources recovered in trespass cases for not less than the appraised value thereof when the amount involved does not exceed $2,000.

SEC. 3.7 *Range management.* The district manager may take all the listed actions on:

(a) Licenses and permits to graze or trail livestock.

(3) Permits or cooperative agreements to construct and maintain range improvements and determine the value of such improvements.

(4) The expenditure of funds appropriated by Congress, or contributed by individuals, associations, advisory boards, or others for the construction, purchase or maintenance of range improvements.

(b) Grazing leases.

(c) Appropriation of water.

(d) Soil and moisture conservation; control of halogeton glomeratus.

(e) Controlled brush burning. In accordance with plans and specifications approved by the State Director.

SEC. 3.8 *Forest management.* The district manager may take all the actions on:

(a) Disposition of forest products except sales of timber in excess of 10,000,000 feet board measure must be approved by State Directors or their delegates prior to advertisement.

(c) In Oregon, cutting of timber on certain mining claims.

(d) Roads.

SEC. 3.9 *Land use.* The district manager may take all the listed action on:

(g) Material other than forest products except sales in excess of $1,000 must be approved by the State Directors or their delegates.

(m) Rights-of-way. Grant logging road rights-of-way over public land west of Range 8 East, Willamette Meridian, Oregon, and rights-of-way over public and acquired land pursuant to 43 CFR 244.53.

(o) Special land-use permits.

(1) Issue special land-use permits for public lands within the grazing and forest districts.

(2) Special land-use permits for revested Oregon and California Railroad and reconveyed Coos Bay Wagon Road grant lands in Oregon.

(3) Special land-use permits for lands outside established grazing and forest districts when specifically authorized by the State Director.

PART IV—REDELEGATIONS OF AUTHORITY TO THE CHIEF, DIVISION OF FIELD SERVICES.

AUTHORITY IN GENERAL

SEC. 4.0 *Functions of Chief, Division of Field Services.* (a) In accordance with the existing policies, regulations and procedures of this Department, and under the direct supervision of the Assistant Director—Operating Services, the Chief, Division of Field Services of the Bureau of Land Management and the Chiefs of Branches of this Division are authorized to perform in their geographical areas of jurisdiction, the functions of the Director, Bureau of Land Management, as listed in Part I of this order and irrespective of geographical limitations all authority of the Director

in the matters listed in section 4.10 of Part IV of this order unless specifically limited.

(b) Limitations. In addition to limitations on authority in specified matters, the authority delegated to the Chief, Division of Field Services shall not include:

(1) The issuance of documents which are amendments of or additions to the Code of Federal Regulations.

(2) The exercise of the supervisory powers of the Secretary, whether by way of appeal to the Secretary or otherwise.

(3) Approval of exchanges of land or of timber for land if the selected lands exceed either 2,000 acres in area or $50,000 in value unless prior clearance is obtained from the Office of the Assistant Director—Operating Services.

SEC. 4.1 *Authority to redelegate.* (a) The Chief, Division of Field Services may redelegate any authority vested in him by this order to any qualified employee in his area of jurisdiction, except the authority to appoint the acting Chief, Division of Field Services. Any order of redelegation of authority pursuant to this section must be approved by the Assistant Director—Operating Services and published in the FEDERAL REGISTER.

(b) Any authority redelegated by the Chief, Division of Field Services may, in his discretion, be exercised personally by him, notwithstanding the redelegation of authority.

AUTHORITY IN SPECIFIED MATTERS

The Chief, Division of Field Services may take all actions on matters listed in sections 1.2 through 1.9 of Part I of this order and section 4.10 subject to the limitations listed in Part I, together with any specific limitations listed below.

SEC. 4.2 *General and miscellaneous matters.* The Chief, Division of Field Services may take all actions listed under this section of Part I of this order, except:

(e) Government contests. The presentation of the Government's case at the hearing.

SEC. 4.3 *Fiscal affairs.* The Chief, Division of Field Services may take all actions listed under this section of Part I of this order, except:

(a)(2) Expend funds made available as a result of the forfeiture of a bond or deposit by a timber purchaser or permittee or of a compromise under the Public Land Administration Act (43 U.S.C. 1381).

(d)(1) Make recommendations to the U.S. Attorney for institution or compromise of suits arising out of trespass.

SEC. 4.4 *Cadastral engineering.* The Chief, Division of Field Services may take all actions listed under this section of Part I.

SEC. 4.5 *Classifications and withdrawals.* The Chief, Division of Field Services may take all actions listed under this section of Part I.

SEC. 4.6 *Minerals.* The Chief, Division of Field Services may take all actions listed under this section of Part I.

SEC. 4.7 *Range management.* The Chief, Division of Field Services may take all actions listed under this section of Part I.

SEC. 4.8 *Forest management.* The Chief, Division of Field Services may take all actions listed under this section of Part I.

SEC. 4.9 *Land use.* The Chief, Division of Field Services may take all actions on matters listed under this section of Part I except:

(d) *Exchanges.* Subject to title opinion of the Field Solicitor.

SEC. 4.10 *Miscellaneous matters.* The Chief, Division of Field Services may take the following actions:

(a) *Drainage entries.* Take all actions on Arkansas and Minnesota drainage entries, in accordance with 43 CFR Parts 117 and 118, respectively.

(b) *Amendments of entries and patents.*

(c) *Patents.* Issue patents or their equivalent for grants of land under the authority of the Government to be issued in the name of the United States, other than patents or other conveyances which require the approval or signature of the President. Patents may be signed by the Chief of the Patent Section, or in his absence, by the Acting Chief of that section.

(d) *Cash and credit system.* Take all actions on cash and credit system and preemption entries when full payment has been made.

(e) *Private land and small holding claims.* Take all actions on:

(1) Confirmed private land claims.

(2) Small holding claims.

(f) *Railroad grants.* Approve the validity of the grant rights in regard to railroad grants and claims within such grants pursuant to 43 CFR, Part 273.

(g) *Certificates, scrip and lieu selections.* Approve the validity of scrip or other rights pursuant to 43 CFR, Parts 130 to 133, inclusive.

(h) *Disposal of specified tracts.* Take all actions in regard to the disposal of specified tracts of public lands when authorized by law.

SEC. 4.11 *Designation of acting officials.* The Chief, Division of Field Services may designate:

(a) Acting Chief, Division of Field Services. By written order, any qualified employee in his office to perform the functions of the Chief, Division of Field Services, in case of death, resignation, absence, or sickness of the Chief, Division of Field Services.

(b) Each employee who serves in such capacity in (a) above, shall prepare a memorandum to be kept in the office of the Division of Field Services, showing the date and hour of the commencement and termination of each period of his service in that capacity.

PART V—REDELEGATIONS OF AUTHORITY TO THE CHIEF, DIVISION OF ENGINEERING

AUTHORITY IN GENERAL

SEC. 5.0 *Functions of Chief, Division of Engineering.* (a) In accordance with existing policies, regulations and procedures of this Department, and under the direct supervision of the Assistant Director—Operating Services, the Chief, Division of Engineering of the Bureau of Land Management is authorized to perform all functions and sign for and on behalf of the Director all documents relating to (1) appointment of mineral surveyors, (2) acceptance of all types of surveys, and (3) approval of all types of protracted surveys.

PART VI—AUTHORITY OF HEARING EXAMINERS

AUTHORITY IN GENERAL

SEC. 6.0 *Functions of hearing examiners.* (a) Hearing examiners in cases before them for hearing and decision are authorized to exercise the powers and authority enumerated in the Federal Range Code (43 CFR Part 161) or the general rules of practice (43 CFR Part 221), whichever may be applicable, or as specified in an order or decision of the Director or Secretary in any case.[6]

AUTHORITY IN SPECIFIED MATTERS

SEC. 6.1 *Reporter's fees.* Hearing examiners in accordance with 43 CFR 221.17 and 221.75, are authorized to take all actions on payments for reporter's fees required of parties to hearings, including action upon requests of parties to be relieved of such payments.

SEC. 6.2 *Copies of records.* Hearing examiners, in accordance with existing policies, regulations and procedures of this Department, are authorized to furnish copies and exemplifications of records, including their decisions and orders.

[6] The powers enumerated in Sec. 7(b) of the Administrative Procedure Act (5 U.S.C. 1001-1011 are by the terms thereof vested in the hearing examiner in any case in which the parties must be afforded opportunity for a hearing conforming with the Act.

SEC. 6.3 *Bonds.* Hearing examiners are authorized to determine the amount of any bond required pursuant to 43 CFR 185.178.

PART VII—APPEALS

SEC. 7.1 *Right of Appeal.* Any person aggrieved by the action of a State Director, Chief, Division of Field Services, hearing examiner, land office manager, district manager or their delegate may appeal to the Director, Bureau of Land Management, and from his decision to the Secretary of the Interior, pursuant to 43 CFR, Parts 161 and 221.

PART VIII—REVOCATION

Bureau of Land Management Orders No. 541, 638, and 645, as amended, are hereby revoked. Redelegations of authority pursuant to Order No. 541, not inconsistent with the delegations herein made, shall continue in force until revoked or superseded.

H. R. HOCHMUTH,
Associate Director.

Order No. 684 - August 28, 1961
(26 F.R. 8216 - August 31, 1961)

1/ Amendment No. 1 - March 7, 1962
(27 F.R. 2417 - March 14, 1962)

6451

RECEIVED
Bureau of Land Management
State Supervisor
OCT 16 1961
Denver, Colorado

Manual

See Amdmt #1 — 3/14/62

DEPARTMENT OF THE INTERIOR

Bureau of Land Management

[Bureau Order No. 684]

LANDS AND RESOURCES [1]

Redelegations of Authorities

AUGUST 28, 1961.

PART I—REDELEGATIONS OF AUTHORITY IN STATE DIRECTORS

AUTHORITY IN GENERAL

Redelegations of authorities concerned with lands and resources.

SECTION 1.0 *Functions of the State Director.* (a) The State Directors of the Bureau of Land Management are authorized to perform in their respective states [2] and in accordance with existing policies, regulations, and procedures of this Department, the functions of the Director, Bureau of Land Management, listed in Part I of this order, including all types of actions in the matters listed, unless specifically limited.

(b) Limitations. In addition to limitations on authority in specified matters, the authority delegated to the State Director shall not include:

(1) The issuance of documents which are amendments of or additions to the Code of Federal Regulations.

(2) The exercise of the supervisory powers of the Secretary, whether by way of appeal to the Secretary or otherwise.

(3) The issuance of patents or their equivalent.

(4) Approval of exchanges of land or of timber for land if the selected lands exceed either 2,000 acres in area or $50,000 in value unless prior clearance is obtained from the Director's office.

SEC. 1.1 *Authority to redelegate.* (a) Each State Director may redelegate or authorize the redelegation of any authority vested in him by this order to any qualified employee under his jurisdiction, except the authority to appoint acting State Directors. Any order of redelegation of authority pursuant to this section must be approved by the Director, Bureau of Land Management and published in the FEDERAL REGISTER, except that:

(1) The State Director may without such approval redelegate to any qualified employee on his immediate staff authority to take actions on behalf of the State Director in matters listed in sections 1.2 through 1.9 of Part I (according to the staff member's functional responsibilities).

(b) Any authority redelegated by the State Director may, in his discretion, be exercised personally by him notwithstanding the redelegation of authority.

AUTHORITY IN SPECIFIED MATTERS

SEC. 1.2 *General and miscellaneous matters.* The State Director may take the following actions, where he has authority in matters listed under other sections of this order:

(a) *Oaths.* Authorize any employee designated to make investigations of matters under the jurisdiction of the Bureau to administer any oath, affirmation, affidavit or deposition provided under the act of October 14, 1940 (5 U.S.C. 498), whenever necessary in the performance of such employee's official duties.

(b) *Cancellations or surrenders of contracts, leases, and permits.* Make partial or complete cancellations or accept surrenders of contracts, leases, and permits.

(c) *Copies of records.* Furnish copies and exemplifications of patents, plats, and other records.

(d) *Gifts.* Accept on behalf of the United States any lands within or without a grazing district as a gift, where such action will promote the purposes of the district or facilitate the administration of the public lands, pursuant to section 8a of the Taylor Grazing Act, as amended (43 U.S.C. section 315g).

(e) *Government contests.* Initiate Government contests against claims asserted to public lands, and take all necessary actions involving the prosecution of such contests except the presentation of the Government's case at the hearing.

(f) *Reports and certifications in connection with Federal land highway projects.* Make reports and certifications as to public lands, in connection with Federal land highway projects, required by (23 U.S.C. 202c).

(g) *Pro-rata road use and maintenance deposits.* Require a user or users of roads or trails to maintain such roads or trails on a pro-rata basis or to accept deposits to provide for such maintenance and to expend such deposited funds for the maintenance of any road or trail under the jurisdiction of the Bureau (43 U.S.C. 1382).

---

[1] Authority source—Department Order as amended.

[2] The State Director for Montana shall also have jurisdiction in the States of North and South Dakota. The State Director for Wyoming shall also have jurisdiction in the States of Nebraska and Kansas. The State Director for New Mexico shall also have jurisdiction in the States of Oklahoma and Texas. The State Director for Oregon shall also have jurisdiction in the State of Washington.

RU

(h) *Cooperative agreements.* May enter into cooperative agreements involving the improvement, management, use and protection of the public lands and their resources under his jurisdiction as provided in the Public Land Administration Act (43 U.S.C. 1363). May enter into Cooperative Agreements under sections 2, 9 and 12 of the June 28, 1934 act (43 U.S.C. 315 et seq.) and under the Act of March 29, 1928 (45 Stat. 380).

Cooperative agreements not clearly within the scope of existing Bureau policies and procedures shall have advance clearance of the Director's office.

(i) *Studies.* May conduct studies, investigations, and experiments, on his own initiative or in cooperation with others, involving the improvement, management, use and protection of the public lands and their resources under his jurisdiction as provided in the Public Land Administration Act (43 U.S.C. 1362).

(j) *Fire protection.* Make contracts and cooperative agreements with Federal, State, County, Municipal and private fire-control organizations for the protection from fire (prevention, presuppression, and suppression) of the public lands under the jurisdiction of the Bureau of Land Management.

SEC. 1.3 *Fiscal affairs.* The State Director may take the following actions:

(a) *Bonds and forfeitures.* (1) Take all actions on bonds required in connection with matters pertaining to the lands or the resources thereof under his jurisdiction.

(2) Expend funds made available as a result of the forfeiture of a bond or deposit by a timber purchaser or permittee or of a compromise under the Public Land Administration Act (43 U.S.C. 1381).

(b) *Contributions, donations, and refunds.* (1) Accept contributions or donations of money, services and property for the improvement, management, use and protection of the public lands and their resources under his jurisdiction. Also accept contributions for cadastral surveying performed on federally controlled or intermingled lands under the Public Land Administration Act (43 U.S.C. 1364).

(2) Accept contributions toward the administration, protection and improvements of lands within or without grazing districts and remit or refund any unappropriated balances of such contributions pursuant to section 9 of the Taylor Grazing Act (43 U.S.C. section 315h).

(c) *Repayment.* Make repayment or refund from applicable funds in any case where payment has been made that is not required or is in excess of the amount required under the Public Land Administration Act (43 U.S.C. 1374); and repayments under 43 CFR Part 217.

(d) *Trespass.* Determine liability and accept damages for trespass on the public lands, and dispose of resources recovered in trespass cases for not less than the appraised value thereof; recommend to the United States Attorney:

(1) Institution of suits arising out of trespass where the money judgment sought is not in excess of $1,000, and

(2) compromise of such suits where the amount is not in excess of $500.

SEC. 1.4 *Cadastral engineering.* The State Director may take the following actions:

(a) *Survey.* (1) Perform all functions pertaining to the survey and resurvey of the public lands under his jurisdiction pursuant to section 453 of the Revised Statutes (43 U.S.C. section 2) except the acceptance of plats of survey, resurvey and the approval of protracted survey diagrams.

(2) Recommend to the Director for appointment mineral surveyors found to be competent pursuant to section 2334 of the Revised Statutes (30 U.S.C. section 39).

(3) Approve plats and field notes of mineral surveys and certification as to expenditures pursuant to 43 CFR 185.43.

(4) Prepare and publish in the FEDERAL REGISTER notices of the official filing of accepted plats of survey, resurvey and approved protracted survey diagrams.

SEC. 1.5 *Classifications and withdrawals.* The State Director may take the following actions:

(a) *Classification of lands.* Classify public lands under section 7 of the Taylor Grazing Act of June 28, 1934, as amended (43 U.S.C. 315f), or pursuant to other laws.

(b) *Orders of withdrawal and restoration.* (1) Issue orders of restoration, where revocations or modification of a withdrawal or reservation is not involved and where an order of revocation provides for opening of the lands by an authorized officer of the Bureau. All such orders shall be published in the FEDERAL REGISTER.

(2) Determine, pursuant to 43 CFR Part 295, with the concurrence of the Administrator of General Services or his delegate, when required, that specified lands withdrawn or reserved from the public domain, and subsequently declared excess to the needs of the agency for which withdrawn or reserved are suitable or not suitable for return to the public domain for disposition under the general public land laws.

(c) *Public Land Orders.* Act on matters relating to the issuance of public land orders, pursuant to 43 CFR 295.9 to 295.11, except actions required by 43 CFR 295.11 (b) and (c) to be taken by the Secretary of the Interior or his delegate.

SEC. 1.6 *Minerals.* The State Director may take the following actions:

(a) *Oil and gas leases.* Act on oil and gas leases pursuant to the Act of February 25, 1920 (30 U.S.C. section 221 et seq.), as amended and supplemented, the Act of August 7, 1947 (30 U.S.C. sections 351–359), and the Act of May 21, 1930 (30 U.S.C. sections 301–305), and oil and gas leases issued pursuant to the Act of August 21, 1916 (39 Stat. 519), embracing lands restored to the public domain pursuant to the provisions of the Act of August 15, 1953 (67 Stat. 592). Also leases of oil and gas deposits transferred to this Department for measures to protect the deposits from drainage. This authority does not include any function pertaining to oil and gas deposits that involve approval or execution of unit or cooperative agreements, communication agreements, operating, drilling or development contracts without regard to acreage limitation or the sale of royalty oil taken in account of production.

(b) *Coal permits, leases, and licenses, asphalt leases.* (1) Act on all matters involving coal permits, leases, and licenses under sections 2 to 8 inclusive, of the Act of February 25, 1920, as amended and supplemented (30 U.S.C. sections 201–208), including coal permits and leases under the Act of August 7, 1947 (30 U.S.C. section 351–359), and coal permits and leases and asphalt leases under the Acts of June 26, 1944 (58 Stat. 483–485), June 24, 1948 (62 Stat. 596), and May 24, 1949 (63 Stat. 75).

(2) The authority delegated by this section shall not include any function relating to the grant, approval or termination of the waiver, suspension, or reduction of rental or minimum royalty, the reduction of royalty, or this suspension of operations and production under a lease.

(c) *Oil shale leases.* Take all actions on oil shale leases under section 21 of the Act of February 25, 1920 (30 U.S.C. section 241), and under the Act of August 7, 1947 (30 U.S.C. section 351–359). The authority delegated by this section shall not include any function relating to the grant, approval or termination of the waiver, suspension or reduction of rental or minimum royalty, the reduction of royalty, or the suspension of operations and production under a lease.

(d) *Phosphate permit and leases.* Take all actions on matters related to phosphate permits and leases under sections 9 to 12 inclusive, of the Act of February 25, 1920 (30 U.S.C. 211–214), as amended, and phosphate permits and leases under the Act of August 7, 1947 (30 U.S.C. 351–359).

(e) *Potassium permits and leases.* Take all actions on matters related to potassium permits and leases under the Act of February 7, 1927 (30 U.S.C. sections 281–285), as amended and potassium permits and leases under the Act of August 7, 1947 (30 U.S.C. 351–359).

(f) *Sodium permits and leases.* Take all actions on sodium permits, leases and use permits under sections 23 to 25 inclusive, of the Act of February 25, 1920, as amended (30 U.S.C. sections 261–263), and under the Act of August 7, 1947 (30 U.S.C. sections 351–359).

(g) *Sulphur permits and leases.* Take all actions on sulphur permits and leases under the Act of April 17, 1926, as amended (30 U.S.C. section 271), and under the Act of August 7, 1947 (30 U.S.C. sections 351–359).

(h) *Agreements to compensate for drainage of oil or gas.* Execute agreements for payment of compensatory royalties because of drainage of oil or gas.

(i) *Gold, silver, and quicksilver leases.* Take all actions on leases of gold, silver, and quicksilver to the owners of confirmed private land claims, pursuant to 43 CFR Part 187.

(j) *Minerals subject to lease under special laws.* Take all actions on permits and leases for sand, gravel, and other minerals under special laws, pursuant to 43 CFR Part 199; also permits and leases for certain mineral deposits in acquired lands, pursuant to 43 CFR 200.31, et seq.

(k) *Mining claims.* Take all actions on claims pursuant to the general mining laws and laws supplemental thereto and 43 CFR Parts 69, 185, and 186.

SEC. 1.7 *Range management.* The State Director may exercise the following authority:

(a) *Grazing district administration.* Act on matters pertaining to the administration of grazing districts pursuant to the Act of June 28, 1934, as amended and supplemented (43 U.S.C. section 315 et seq., 16 U.S.C. section 715i), and 43 CFR Parts 161, 163, and 165 as follows:

(1) Licenses or permits to graze or trail livestock.

(2) Permits or cooperative agreements to construct and maintain range improvements and determine the value of such improvements.

(3) The expenditure of funds appropriated by the Congress, or contributed by individuals, associations, advisory boards, or others, for the construction,

purchase or maintenance of range improvements.

(4) Leases under the Pierce Act (43 U.S.C. sections 315m–1 to 315m–4 inclusive).

(5) Requirements of field employees to furnish horses and miscellaneous equipment necessary for the performance of their official duties, pursuant to the Act of December 10, 1942 (43 U.S.C. section 315o–2), and make payments in connection therewith as authorized by the act.

(6) Hold hearings when necessary in connection with the modification of grazing district boundaries.

(7) Approve articles of incorporation, constitutions, and bylaws for local associations of stockmen pursuant to 43 CFR Part 161.

(b) *Grazing leases.* (1) Grazing leases of public lands, under section 15 of the Act of June 28, 1934, as amended (43 U.S.C. section 315m), and the permits or cooperative agreements to construct and maintain improvements on lands so leased, and to determine the value of such improvements.

(2) Grazing leases of the revested Oregon and California Railroad and the reconveyed Coos Bay Wagon Road grant lands in Oregon, and crossing permits for such lands, in accordance with 43 CFR Part 115.

(3) Grazing leases of public lands in Alaska, under the Act of March 4, 1927 (43 U.S.C. sections 471, 471a–471c); leases and permits for grazing of reindeer pursuant to section 14 of the Act of September 1, 1937 (50 Stat. 902; 48 U.S.C. 250m).

(c) *Appropriation of water.* Applications under State laws to appropriate water on lands under the administration of the Bureau of Land Management where required in connection with projects for the development, control or utilization of water; and procurement of easements or rights-of-way upon or over private lands, and also upon or over federally-owned lands not under the administration of the Bureau and upon or over State, county, and municipally owned lands where improvements are installed.

(d) *Soil and moisture conservation; control of Halogeton glomeratus.* (1) Soil and moisture conservation on the public lands, pursuant to the National Soil Conservation Act of April 27, 1935 (16 U.S.C. section 590a, et seq.).

(2) Surveys and other operations and the expenditure of appropriated funds and contributions, under the Halogeton Glomeratus Control Act of July 14, 1952 (66 Stat. 597), and Departmental Order No. 2835 of October 2, 1958.

(3) The authority granted by paragraphs (1) and (2) shall include authority to enter into cooperative agreements in the matters listed and shall be subject to the coordination and general supervision of the Office of the Secretary.

(e) *Controlled brush burning.* Issue permits for the controlled burning of brush, as a means of improving the range by the replacement of the brush with grass and other desirable species.

SEC. 1.8 *Forest management.* The State Director may take the following actions:

(a) *Disposition of forest products.* (1) Dispose of or permit the free use of forest products when authorized by law on lands under the jurisdiction of the Bureau of Land Management. This authority shall not include the approval of any sale of timber in excess of 25,000,000 feet, board measure.

(2) Sell timber on lands under the jurisdiction of the Bureau of Reclamation, in accordance with Department Order No. 2533 of September 7, 1949.

(b) *Hearings in connection with sustained-yield forest units.* Schedule and hold public hearings on master forest units and their appurtenant marketing areas, and on sustained-yield forest units, comprising revested Oregon and California Railroad and reconveyed Coos Bay Wagon Road grant lands in Oregon, and lands in private ownership or controlled by other public agencies, under authority of the Act of August 28, 1937 (50 Stat. 874), and (16 U.S.C. sections 383a–388i). The notice of hearing may designate any qualified employee in the area to holding the hearing. This shall not include the approval of sustained-yield timber units.

(c) *Cutting of timber on certain mining claims in Oregon.* Approve applications from owners of mining claims located since August 28, 1937, on revested Oregon and California Railroad and reconveyed Coos Bay Wagon Road grant lands in Oregon, to cut and use so much of the timber on the mining claims as is necessary in the development and operation of the mines until such time as the timber is otherwise disposed of by the United States pursuant to the Act of April 8, 1948 (62 Stat. 162).

(d) *Roads.* Act on matters involving the acquisition of rights-of-way and roads under the Act of July 26, 1955 (69 Stat. 374), including purchases after clearance with the Department of Justice but not including recommendations to the Attorney General for condemnation proceedings; also the approval of projects for the construction of roads to provide access to the timber on public lands subject to that act.

SEC. 1.9 *Land use.* The State Director may take the following actions:

(a) *Airports and air navigation facilities.* (1) Issue leases of public lands for public airports and permits for air navigation facilities under the Act of May 24, 1928 (49 U.S.C. section 211–214).

(2) Take all actions under the Federal Airport Act (49 U.S.C. section 1101).

(b) *Cemetery sites.* Take all actions relating to cemetery sites pursuant to 43 CFR Parts 72 and 253.

(c) *Color-of-title and riparian claims.* Take all actions relating to color-of-title and riparian claims, under 43 CFR Parts 140 and 141.

(d) *Exchanges.* Take actions subject to the title opinion of the field solicitor, in all matters relating to exchanges of lands and of timber for lands, except where the value of the selected lands or timber exceeds $250,000, and issue quitclaim deeds authorized by section 6 of the Act of April 28, 1930 (46 Stat. 257).

(e) *Homesteads.* Take all actions on homesteads pursuant to 43 CFR Parts 65, 66 and 166 to 170 inclusive.

(f) *Indian allotments.* Take all actions relating to Indian allotments with the concurrence of the Commissioner of Indian Affairs, pursuant to 43 CFR Parts 176 and 67.

(g) *Material other than forest products.* Take all actions relating to any sale or contract for the sale of material other than forest products, or the free use of materials other than forest products, under 43 CFR Part 259.

(h) *Mineral or medicinal springs.* Take all actions relating to leases of lands adjacent to mineral or medicinal springs, under the Act of March 3, 1925 (43 U.S.C. section 971).

(i) *Sites for recreational or any public purpose.* Take all actions with respect to conveyances and leases to Federal, State, Territory and local government units and to non-profit associations and corporations pursuant to 43 CFR Part 254, and to other applicable regulations and all actions in connection with the construction maintenance and disposition of recreational facilities in Alaska pursuant to the Act of May 4, 1956 (70 Stat. 130).

(j) *Public sales.* (1) Take all actions on public sales pursuant to 43 CFR Part 250, and other sales of land by competitive bidding when authorized by law.

(2) Applications by and sales to aliens, associations having an appreciable number of alien members, and corporations whose stock to an appreciable extent is held by aliens, are subject to approval by the Secretary of the Interior.

(k) *Railroad grants.* Adjust railroad grants and claims within such grants, pursuant to 43 CFR Part 273, subject to approval of the validity of the grant rights.

(l) *Reclamation and irrigation.* Take all actions on reclamation and desert-land entries, State irrigation districts, and Nevada underground water permits and entries, pursuant to 43 CFR Parts 230 to 234, inclusive; also entries, sales, and exchanges of lands in reclamation projects, pursuant to 43 CFR Chapter II, Bureau of Reclamation, or special instructions of the Secretary of the Interior, to the extent that action by the Bureau of Land Management is required.

(m) *Rights-of-way.* (1) Grant right-of-way permits and easements over public and acquired lands, including revested Oregon and California Railroad and reconveyed Coos Bay Wagon Road grant lands in Oregon and over reservations other than Indian reservations, when authorized by law, and rights-of-way over the Outer Continental Shelf purusuant to 43 CFR Part 202. However, only the Secretary of the Interior may issue an order, pursuant to 43 CFR 244.9 (m), requiring the discontinuance, without liability or expense to the United States, of the use of a right-of-way for the purpose granted.

(2) Consent to the appropriation of Federal agencies under the principles of the instructions of January 13, 1916 (44 1d 513; 43 CFR 205.13–205.15) of rights-of-way over unreserved or withdrawn lands. (See 43 CFR Part 244, footnote 1).

(n) *Small tracts.* Take all actions with respect to small tracts, under the Act of June 1, 1938 (43 U.S.C. section 682e), as amended.

(o) *Special land-use permits.* Take all actions in issuing:

(1) Special land-use permits for public lands, pursuant to 43 CFR Part 258.

(2) Special land-use permits for revested Oregon and California Railroad and reconveyed Coos Bay Wagon Road grant lands in Oregon pursuant to 43 CFR Part 115.

(3) Special land-use permits for acquired lands under the administration of the Bureau of Land Management, under the principles embodied in 43 CFR Part 258.

(4) Permits to use areas below the high-water mark of navigable waters in Alaska for occupancy purposes under the principles embodied in 43 CFR Part 258, subject to rules, regulations, and requirements of the Department of the Army respecting the navigation of such streams.

(5) Every such permit issued to a Federal agency or to a State agency or political subdivision shall be restricted to the smallest area needed for the proposed use. Not more than 50,000 acres may be included in any such permit, except that in Alaska permits may be issued to the Department of Defense for maneuver purposes for such acreages in excess of 50,000 acres and for such periods as may be deemed warranted in the circumstances. No permit may be issued under this authority where a withdrawal or a class which the Director is not authorized to make is requested.

(p) *State grants.* Take all actions on State grants and selections when authorized by law, but not including the approval of clear lists pursuant to section 2449 of the Revised Statutes (43 U.S.C. section 859).

(q) *Surface rights.* Take all actions on nonmineral applications for lands embraced in mineral permits or leases, or in applications for such permits or leases, or classified, withdrawn, or reported as valuable for any leasable mineral or lying within the geologic structure of a field, in accordance with 43 CFR Parts 102 and 66.

(r) *Townsites.* Take all actions on all townsite matters except withdrawals, including the designation of townsite trustees as provided in 43 CFR 80.2 under authority of section 11 of the Act of March 3, 1891 (26 Stat. 1099, 48 U.S.C. 355) and as provided in 43 CFR 80.19 under authority of the Act of May 25, 1926 (44 Stat. 629, 48 U.S.C. 355a–355d). Provided, that reclamation townsite matters shall be handled jointly with the Commissioner of Reclamation, pursuant to 43 CFR 255.42 to 255.45 inclusive, and 255.47.

(s) *Water wells.* Take all actions on water-well leases, pursuant to section 40 of the Mineral Leasing Act (30 U.S.C. section 229a) and 30 CFR 241.6.

(t) *Matters pertaining to Alaska only.* (1) Alaska—furfarms. Take all actions on leases of public lands in Alaska for furfarms, under the Act of July 3, 1926 (48 U.S.C. section 360, 361).

(2) Alaska, homesites or headquarters. Take all actions on homesites or headquarters in Alaska, pursuant to 43 CFR Part 64.

(3) Alaska Housing Authority. Transfer to the Alaska Housing Authority lands above high-water mark and under the jurisdiction of the Department of the Interior pursuant to section 6 of the Alaska Housing Act of April 23, 1949 (48 U.S.C. section 484c).

(4) Alaska, Matanuska Valley. Dispose of lands in the Matanuska Valley, Alaska, under the Act of October 17, 1940 (48 U.S.C. section 353 Note).

(5) Alaska Public Works. Take all actions on transfers in accordance with section 7 of the Act of August 24, 1949 (48 U.S.C. section 486e), of any interest in public lands in Alaska for any public works project which has been approved under section 4 of the act.

(6) Alaska, trade and manufacturing sites. Take all actions on trade and manufacturing sites in Alaska, pursuant to 43 CFR Part 81.

(7) Alaska missions claims. Take all actions pursuant to section 27 of the Act of June 6, 1900 (31 Stat. 330) and 50 L.D. 55.

(8) Shore space restrictions. Take all actions in connection with the waiver, pursuant to the Act of June 5, 1920, as amended (48 U.S.C. 372), and 43 CFR Part 77, of the 160 rod restriction as to the length of claims along the shores of navigable waters in Alaska.

(u) *Certificates, scrip and lieu selections.* Take all actions in connection with certificates and scrip under 43 CFR Parts 61 and 130 to 133, inclusive and also forest lieu selections, in accordance with footnote 1, to Part 130, subject to approval of the validity of the scrip or other rights.

(v) *Choctaw-Chickasaw lands.* Take all actions on matters pertaining to the management and disposition of the Choctaw-Chickasaw lands pursuant to 43 CFR Part 19.

SEC. 1.10 *Designation of Acting Officials.* The State Director may designate:

(a) *Acting State Director.* By written order, any Chief of Division or Operations Supervisor in his State to perform the functions of the State Director, in case of death, resignation, absence, or sickness, of the State Director.

(b) *Acting Chief of Division.* By written order, any qualified employee of the various staff offices to perform the functions of the Chief of Division, in case of death, resignation, absence, or sickness of the Chief of Division.

(c) *Acting Land Office Manager.* By written order, any qualified employee of the land office to perform the functions of the Land Office Manager in case of death, resignation, absence, or sickness of the Land Office Manager.

(d) *Acting District Manager.* By written order, any qualified employee of the district office to perform the functions of the District Manager, in case of death, resignation, absence, or sickness of the District Manager.

(e) No other employee may be designated by the State Director to serve as Acting State Director except with the prior approval of the Director, and each employee who serves in such capacity in (a), (b), (c), or (d) above shall prepare a memorandum to be kept in the State Office showing the date and hour of the commencement and termination of each period of his service in that capacity.

PART I–A—REDELEGATION OF AUTHORITY TO ALASKA OPERATIONS SUPERVISORS

The Alaska Operations Supervisors are authorized to perform in their respective areas and in accordance with the existing policies, regulations and procedures of this Department and under the direct supervision of the State Director, the functions of the Director, Bureau of Land Management as listed in Part I of this order.

PART II—REDELEGATION TO LAND OFFICE MANAGERS

AUTHORITY IN GENERAL

SEC. 2.0 *Functions of Land Office Manager.* (a) The land office managers are authorized to perform in their re-

spective areas of responsibility[3] and in accordance with the existing policies, regulations and procedures of this Department and under the direct supervision of the State Director,[4] the functions of the Director, Bureau of Land Management, as listed below, subject to the limitations listed in Part I together with any limitations specified below.

SEC. 2.1 *Authority to redelegate.* The land office manager may redelegate to the Chief, Minerals Section, authority to take action for the manager in matters listed in section 2.6 of Part II, and to the Chief, Lands Section, authority to take action for the manager in matters listed in section 2.9 of Part II. He may also redelegate to the Operations Manager authority to take action for the manager in matters within the Operations Manager's specified responsibility. Any order of redelegation must be approved by the State Director and published in the FEDERAL REGISTER.

AUTHORITY IN SPECIFIED MATTERS

SEC. 2.2 *General and miscellaneous matters.* The land office manager may take all actions on:

(b) Cancellations or surrenders of contracts and leases.

(c) Copies of records.

(d) Government contests.

SEC. 2.3 *Fiscal affairs.* The land office manager may take all actions on:

(a) *Bonds.* Authority limited to section 1.3(a)(1) of Part I of this order.

(c) *Repayments.*

SEC. 2.4 *Cadastral engineering.* The land office manager may take the following action:

(a)(4) Preparation and publication in the FEDERAL REGISTER of notices of the official filing of accepted plats of survey, resurvey and approved protracted survey diagrams.

SEC. 2.5 *Classifications and withdrawals.* Subject to receipt of a report from the State Director, the land office manager may take all the listed actions on:

(b) Orders of withdrawal and ~~restoration~~ reservations.

(c) ~~Public land orders.~~ Restoration orders.

Amendment 3/14/62

[3] The land office manager at Billings shall also have jurisdiction in North and South Dakota. The land office manager at Cheyenne shall also have jurisdiction in Nebraska and Kansas. The land office manager at Santa Fe shall also have jurisdiction in Oklahoma and Texas.

[4] The land office manager at Spokane is under the direct supervision of the State Director of Oregon.

SEC. 2.6 *Minerals.* The land office manager may take all the listed actions on:

See Amendment 3/14/62

(a) Oil and gas leases.

(b) Coal permits, leases, and licenses; asphalt leases.

(c) Oil shale leases.

(d) Phosphate leases.

(e) Potassium permits and leases.

(f) Sodium permits and leases.

(g) Sulphur permits and leases.

(h) Agreements to compensate for drainage of oil and gas.

(i) Gold, silver, and quicksilver leases.

(j) Minerals subject to lease under special laws.

(k) Mining claims.

SEC. 2.7 *Range management.* The land office manager may take all actions on:

(b)(3) Grazing leases of public lands in Alaska under the act of March 4, 1927 (48 U.S.C. secs. 471, 471a–471c).

SEC. 2.9 *Land use.* Subject to classification action by the State Director where necessary, the land office manager may take all actions on:

(a) Airports and air navigation facilities.

(b) Cemetery sites.

(c) Color-of-title and riparian claims. Subject to approval of color-of-title or claim of right by the Field Solicitor.

(d) Exchanges.

(1) Authority subject to title approval of offered lands by the Field Solicitor and limited to exchanges in which the value of the selected lands does not exceed $50,000.

(e) Homesteads.

(f) Indian allotments.

(g) Material other than forest products.

(h) Mineral or medicinal springs.

(i) Sites for recreational or any public purposes.

(j) Public sales.

(k) Railroad grants.

(l) Reclamation and irrigation.

(m) Rights-of-way. Authority does not include logging road rights-of-way on public lands west of Range 8 East, Willamette Meridian, Oregon.

(n) Small tracts.

(o) Special land-use permits, except:

(1) Special land-use permits within grazing or forest districts.

(2) Special land-use permits for revested Oregon and California Railroad and reconveyed Coos Bay Wagon Road grant lands in Oregon.

(p) State grants.

(q) Surface rights.

(r) Townsites. Except designation of townsite trustees.

(s) Water wells.

W. Small Holding Claims Amendment 3/14/62

(t) Matters pertaining to Alaska only. The land office manager may take all the listed actions on:

(1) Alaska, fur farms.

(2) Alaska, homesites or headquarters.

(3) Alaska, housing authority.

(4) Alaska, Matanuska Valley.

(5) Alaska public works.

(6) Alaska, trade and manufacturing sites.

(7) Alaska mission claims.

(8) Shore space restrictions.

(u) Certificates, scrip and lieu selections.

(v) Choctaw-Chickasaw lands.

PART III—REDELEGATION TO DISTRICT MANAGERS

AUTHORITY IN GENERAL

SEC. 3.0 *Functions of District Manager.* (a) The district managers are authorized to perform in their respective areas of responsibility and in accordance with the existing policies, regulations and procedures of this Department, and under the direct supervision of the State Director, the functions of the Director, Bureau of Land Management, as listed below, subject to the limitations listed in Part I together with any limitations specified below.

AUTHORITY IN SPECIFIED MATTERS

SEC. 3.2 *General and miscellaneous matters.* On matters in which he is authorized to act, the district manager may take all actions on:

(b) Cancellations or surrenders of contracts.

(c) Copies of records.

SEC. 3.3 *Fiscal affairs.* On matters in which he is authorized to act, the district manager may take all actions on:

(a) Bonds. Authority limited to section 1.3(a)(1) of Part I of this order.

(b) Contributions, donations and refunds.

(c) Repayments.

(d) Tresspass. Determine liability and accept damages for trespass on the public lands and dispose of resources recovered in trespass cases for not less than the appraised value thereof when the amount involved does not exceed $2,000.

SEC. 3.7 *Range management.* The district manager may take all the listed actions on:

(a) Licenses and permits to graze or trail livestock.

(3) Permits or cooperative agreements to construct and maintain range improvements and determine the value of such improvements.

(4) The expenditure of funds appropriated by Congress, or contributed by individuals, associations, advisory boards, or others for the construction, purchase or maintenance of range improvements.

(b) Grazing leases.

(c) Appropriation of water.

(d) Soil and moisture conservation; control of halogeton glomeratus.

(e) Controlled brush burning. In accordance with plans and specifications approved by the State Director.

SEC. 3.8 *Forest management.* The district manager may take all the actions on:

(a) Disposition of forest products except sales of timber in excess of 10,000,000 feet board measure must be approved by State Directors or their delegates prior to advertisement.

(c) In Oregon, cutting of timber on certain mining claims.

(d) Roads.

SEC. 3.9 *Land use.* The district manager may take all the listed action on:

(g) Material other than forest products except sales in excess of $1,000 must be approved by the State Directors or their delegates.

(m) Rights-of-way. Grant logging road rights-of-way over public land west of Range 8 East, Willamette Meridian, Oregon, and rights-of-way over public and acquired land pursuant to 43 CFR 244.53.

(o) Special land-use permits.

(1) Issue special land-use permits for public lands within the grazing and forest districts.

(2) Special land-use permits for revested Oregon and California Railroad and reconveyed Coos Bay Wagon Road grant lands in Oregon.

(3) Special land-use permits for lands outside established grazing and forest districts when specifically authorized by the State Director.

PART IV—REDELEGATIONS OF AUTHORITY TO THE CHIEF, DIVISION OF FIELD SERVICES.

AUTHORITY IN GENERAL

SEC. 4.0 *Functions of Chief, Division of Field Services.* (a) In accordance with the existing policies, regulations and procedures of this Department, and under the direct supervision of the Assistant Director—Operating Services, the Chief, Division of Field Services of the Bureau of Land Management and the Chiefs of Branches of this Division are authorized to perform in their geographical areas of jurisdiction, the functions of the Director, Bureau of Land Management, as listed in Part I of this order and irrespective of geographical limitations all authority of the Director in the matters listed in section 4.10 of Part IV of this order unless specifically limited.

(b) Limitations. In addition to limitations on authority in specified matters, the authority delegated to the Chief, Division of Field Services shall not include:

(1) The issuance of documents which are amendments of or additions to the Code of Federal Regulations.

(2) The exercise of the supervisory powers of the Secretary, whether by way of appeal to the Secretary or otherwise.

(3) Approval of exchanges of land or of timber for land if the selected lands exceed either 2,000 acres in area or $50,000 in value unless prior clearance is obtained from the Office of the Assistant Director—Operating Services.

SEC. 4.1 *Authority to redelegate.* (a) The Chief, Division of Field Services may redelegate any authority vested in him by this order to any qualified employee in his area of jurisdiction, except the authority to appoint the acting Chief, Division of Field Services. Any order of redelegation of authority pursuant to this section must be approved by the Assistant Director—Operating Services and published in the FEDERAL REGISTER.

(b) Any authority redelegated by the Chief, Division of Field Services may, in his discretion, be exercised personally by him, notwithstanding the redelegation of authority.

AUTHORITY IN SPECIFIED MATTERS

The Chief, Division of Field Services may take all actions on matters listed in sections 1.2 through 1.9 of Part I of this order and section 4.10 subject to the limitations listed in Part I, together with any specific limitations listed below.

SEC. 4.2 *General and miscellaneous matters.* The Chief, Division of Field Services may take all actions listed under this section of Part I of this order, except:

(e) Government contests. The presentation of the Government's case at the hearing.

SEC. 4.3 *Fiscal affairs.* The Chief, Division of Field Services may take all actions listed under this section of Part I of this order, except:

(a)(2) Expend funds made available as a result of the forfeiture of a bond or deposit by a timber purchaser or permittee or of a compromise under the Public Land Administration Act (43 U.S.C. 1381).

(d)(1) Make recommendations to the U.S. Attorney for institution or compromise of suits arising out of trespass.

SEC. 4.4 *Cadastral engineering.* The Chief, Division of Field Services may take all actions listed under this section of Part I.

SEC. 4.5 *Classifications and withdrawals.* The Chief, Division of Field Services may take all actions listed under this section of Part I.

SEC. 4.6 *Minerals.* The Chief, Division of Field Services may take all actions listed under this section of Part I.

SEC. 4.7 *Range management.* The Chief, Division of Field Services may take all actions listed under this section of Part I.

SEC. 4.8 *Forest management.* The Chief, Division of Field Services may take all actions listed under this section of Part I.

SEC. 4.9 *Land use.* The Chief, Division of Field Services may take all actions on matters listed under this section of Part I except:

(d) *Exchanges.* Subject to title opinion of the Field Solicitor.

SEC. 4.10 *Miscellaneous matters.* The Chief, Division of Field Services may take the following actions:

(a) *Drainage entries.* Take all actions on Arkansas and Minnesota drainage entries, in accordance with 43 CFR Parts 117 and 118, respectively.

(b) *Amendments of entries and patents.*

(c) *Patents.* Issue patents or their equivalent for grants of land under the authority of the Government to be issued in the name of the United States, other than patents or other conveyances which require the approval or signature of the President. Patents may be signed by the Chief of the Patent Section, or in his absence, by the Acting Chief of that section.

(d) *Cash and credit system.* Take all actions on cash and credit system and preemption entries when full payment has been made.

(e) *Private land and small holding claims.* Take all actions on:

(1) Confirmed private land claims.

(2) Small holding claims.

(f) *Railroad grants.* Approve the validity of the grant rights in regard to railroad grants and claims within such grants pursuant to 43 CFR, Part 273.

(g) *Certificates, scrip and lieu selections.* Approve the validity of scrip or other rights pursuant to 43 CFR, Parts 130 to 133, inclusive.

(h) *Disposal of specified tracts.* Take all actions in regard to the disposal of specified tracts of public lands when authorized by law.

SEC. 4.11 *Designation of acting officials.* The Chief, Division of Field Services may designate:

(a) Acting Chief, Division of Field Services. By written order, any qualified employee in his office to perform the functions of the Chief, Division of Field Services, in case of death, resignation, absence, or sickness of the Chief, Division of Field Services.

(b) Each employee who serves in such capacity in (a) above, shall prepare a memorandum to be kept in the office of the Division of Field Services, showing the date and hour of the commencement and termination of each period of his service in that capacity.

PART V—REDELEGATIONS OF AUTHORITY TO THE CHIEF, DIVISION OF ENGINEERING

AUTHORITY IN GENERAL

SEC. 5.0 *Functions of Chief, Division of Engineering.* (a) In accordance with existing policies, regulations and procedures of this Department, and under the direct supervision of the Assistant Director—Operating Services, the Chief, Division of Engineering of the Bureau of Land Management is authorized to perform all functions and sign for and on behalf of the Director all documents relating to (1) appointment of mineral surveyors, (2) acceptance of all types of surveys, and (3) approval of all types of protracted surveys.

PART VI—AUTHORITY OF HEARING EXAMINERS

AUTHORITY IN GENERAL

SEC. 6.0 *Functions of hearing examiners.* (a) Hearing examiners in cases before them for hearing and decision are authorized to exercise the powers and authority enumerated in the Federal Range Code (43 CFR Part 161) or the general rules of practice (43 CFR Part 221), whichever may be applicable, or as specified in an order or decision of the Director or Secretary in any case.[5]

AUTHORITY IN SPECIFIED MATTERS

SEC. 6.1 *Reporter's fees.* Hearing examiners in accordance with 43 CFR 221.17 and 221.75, are authorized to take all actions on payments for reporter's fees required of parties to hearings, including action upon requests of parties to be relieved of such payments.

SEC. 6.2 *Copies of records.* Hearing examiners, in accordance with existing policies, regulations and procedures of this Department, are authorized to furnish copies and exemplifications of records, including their decisions and orders.

SEC. 6.3 *Bonds.* Hearing examiners are authorized to determine the amount of any bond required pursuant to 43 CFR 185.178.

PART VII—APPEALS

SEC. 7.1 *Right of Appeal.* Any person aggrieved by the action of a State Director, Chief, Division of Field Services, hearing examiner, land office manager, district manager or their delegate may appeal to the Director, Bureau of Land Management, and from his decision to the Secretary of the Interior, pursuant to 43 CFR, Parts 161 and 221.

PART VIII—REVOCATION

Bureau of Land Management Orders No. 541, 638, and 645, as amended, are hereby revoked. Redelegations of authority pursuant to Order No. 541, not inconsistent with the delegations herein made, shall continue in force until revoked or superseded.

H. R. HOCHMUTH,
Associate Director.

100580
100581

UNITED STATES
DEPARTMENT OF THE INTERIOR
Bureau of Land Management
Washington 25, D. C.

1214.3
1543.2

August 28, 1961

ORDER NO. 685

Subject: Delegation of authority - Allowance for Quarters, Subsistence and Services

Sec. 1 Authority to fix rates. (a) Pursuant to the authority contained in DM Part 205 Chapter 10 the State Directors are authorized to fix rates for all quarters, subsistence, and services which are provided by the Government in their respective States, in accordance with the standards prescribed in the Manual of Allowances for Quarters, Subsistence, and Services, and such other regulations on this subject as may be issued by the Secretary.

(b) The State Directors are authorized to appoint Quarters Evaluations Boards. Such Boards shall be responsible for recommending the rates which are to be fixed as provided in subsection (a) of this section.

(c) After the State Director determines, pursuant to the provisions of Sec. 1413 of the Act of July 15, 1952, (66 Stat. 661), that necessary service cannot be rendered or property of the United States cannot be protected adequately otherwise he may require an officer or employee of his State to occupy Government-owned quarters. Copies of all actions taken pursuant to this subsection shall be forwarded to the Washington office, and to the Administrative Field Office.

Sec. 2 Revocation. Bureau Order No. 516 of April 30, 1953, is revoked.

/s/Karl S. Landstrom
Director

Bureau Order Distribution List

Sup by manual ref. no. 1214.2
1400-410.2

UNITED STATES
DEPARTMENT OF THE INTERIOR
BUREAU OF LAND MANAGEMENT
Washington 25, D. C.

6.02e

September 7, 1961

Order No. 686

Subject: Delegation of authority for approving training in non-Government facilities

Section 1:

Pursuant to the authority and subject to the limitations of 383.4.1 DM, the Assistant Director, Administration, and the Chief, Branch of Training, of the Bureau of Land Management are authorized to approve all requests for training of Bureau employees in non-Government facilities for periods of 120 hours or less.

/s/ Karl S. Landstrom
Director

BUREAU DISTRIBUTION LIST

1214.3
1400-735

UNITED STATES
DEPARTMENT OF THE INTERIOR
Bureau of Land Management
Washington 25, D. C.

September 18, 1961

Order No. 687

Subject: Testimony of Employees

1. Section 2.20 of Title 43, CFR, provides in part that an officer or employee of this Department is prohibited from giving testimony, in a judicial or administrative proceeding concerning matters related to the business of the Government, or the contents of official records, unless a request for such testimony is made by the person or public agency wishing to obtain the testimony, and the giving of the testimony is authorized by the head of the bureau or office, or his designee.

2. Pursuant to the authority contained in the above mentioned section, each State Director may authorize any officer or employee of his State to testify in a judicial or administrative proceeding concerning matters related to the business of the Government or the contents of official records whenever a written request for such testimony is received and, in the opinion of the State Director, permission to give the testimony should be granted.

3. If the State Director is of the opinion that a request should be denied, the request should be forwarded to the Director with an appropriate recommendation.

4. Bureau Order No. 603 of December 5, 1955, is hereby revoked.

H. R. Hochmuth

Associate Director

Bureau Order Distribution List

1214.2
1400-735
In reply refer to:
6.02d-1

UNITED STATES
DEPARTMENT OF THE INTERIOR
Bureau of Land Management
Washington 25, D. C.

April 19, 1963

ORDER NO. 687, Amendment No. 1

Subject: Testimony of Employees

1. Paragraph 2 of Bureau Order No. 687 dated September 18, 1961, is amended to read as follows:

Pursuant to the authority contained in section 2.20 of Title 43 CFR, each State Director and each Field Administrative Officer may authorize any employee of the Bureau under his jurisdiction, to testify in a judicial or administrative proceeding concerning matters related to the business of the Government or the contents of official records whenever a written request for such testimony is received and in the opinion of the State Director or the Field Administrative Officer, permission to give the testimony should be granted.

2. Paragraph 3 is amended to read as follows:

If any State Director or Field Administrative Officer is of the opinion that a request should be denied, the request should be forwarded to the Director with an appropriate recommendation.

R.R. Hochmuth
Associate Director

BUREAU ORDER DISTRIBUTION LIST

1213.3
1710

UNITED STATES
DEPARTMENT OF THE INTERIOR
Bureau of Land Management
Washington 25, D. C.

November 9, 1961

ORDER NO. 688

Subject: Establishment of District Office at Riverside, California
Modification of Boundaries of Bakersfield and Sacramento District Offices

Effective November 20, 1961, a district office of the Bureau will be established at Riverside, California. This office shall handle section 15 grazing leases, material sales, trespass actions, lands and mineral classifications and such other matters as may be delegated.

The area of responsibility of the Riverside District Office will include the counties of Imperial, San Diego, Orange, Riverside and San Bernardino. These counties are eliminated from the area of responsibility of the Bakersfield District Office. The lands in townships 25 to 32S.; R. 41, M.D.M. will remain in California Grazing Districts No. 1 under the jurisdiction of the Bakersfield District Office insofar as grazing activities are concerned.

The counties of Tulane and Kings are eliminated from the area of responsibility of the Sacramento District Office and are added to the area of responsibility of the Bakersfield District Office.

/s/ H. R. Hochmuth
Acting Director

BUREAU ORDER DISTRIBUTION LIST

UNITED STATES
DEPARTMENT OF THE INTERIOR
Bureau of Land Management
Washington 25, D. C.

November 14, 1961

ORDER NO. 609 Superseded by BM Rel. 1-2

Subject: Delegation of Authority - Travel

Sec. 1 Pursuant to Secretarial Order 2576, the authority to authorize or approve travel, transportation and related expenses in connection with attendance at meetings is redelegated to the Executive Director and Assistant Directors.

Sec. 2 Pursuant to Secretarial Orders 2617 and 2803, the authority to authorize or approve official travel, transportation and related expenses, allowances and costs under other statutory allowances, except outlined paragraph (a) below (within the United States and Alaska) is redelegated to the following officers:

(a) The Assistant Director - Administration

(b) State Directors and Field Administrative Officers (which shall include Chief, Technical Services of Alaska). Except that these officers may not authorize:

(1) The attendance of employees at meetings or conventions of employee associations or associations concerned with the work of the Bureau and;

(2) The travel of a State Director or Field Administrative Officer.

(c) The Manager, Records Improvement Project, Billings, Montana as to employees of the project other than himself.

[illegible]

[illegible] arrangements in order [illegible]

the State Directors to the District [illegible]

states.

[illegible]

/s/ H. R. Hoenmann
Associate Director

Bureau Order Distribution List

Miller

[illegible]

January 5, 1962

ORDER NO. 689, Amendment No. 1

Subject: Delegation of Authority - Travel

Superseded

Sec. 2(d) is added as follows:

(d) The Field Committee Representative, Denver, Colorado, [illegible]

[illegible]

Associate Director

BUREAU ORDER DISTRIBUTION LIST

UNITED STATES
DEPARTMENT OF THE INTERIOR
Bureau of Land Management
Washington 25, D. C.

April 9, 1962

Superseded

ORDER NO. 659, Amendment No. 2

Subject: Delegation of Authority - Travel

Sec. 2(e) is added as follows:

(e) The Field Administrative Officers for employees transferring between states with a change in the permanent duty station.

Associate Director

BUREAU ORDER DISTRIBUTION LIST

1 c/Miller

UNITED STATES
DEPARTMENT OF THE INTERIOR
Bureau of Land Management
Washington 25, D. C.

July 2, 1962

~~Revoked~~ Superseded by BM Rel. 1-2

ORDER NO. 689, Amendment No. 3

Subject: Delegation of Authority - Travel

Sec. 1 is amended to read as follows:

Pursuant to Secretarial Order 2576, the authority to authorize or approve travel, transportation and related expenses in connection with the attendance at meetings is redelegated to the Associate Director and the Assistant Director, Administration.

E. R. Hochmuth

Acting Director

BUREAU ORDER DISTRIBUTION LIST

UNITED STATES
DEPARTMENT OF THE INTERIOR
Bureau of Land Management
Washington, D. C. 20240

In reply refer to:
1214-1862 (732a)

August 28, 1964

BUREAU ORDER NO. 690, AMENDMENT NO. 3

SUBJECT: Delegation of Authority - Issuance of Patents

Effective immediately, the Nevada Land Office Manager is authorized to issue patents or their equivalent in the name of the United States for grants of land under the authority of the Government, except patents and other conveyances which require the approval or signature of the President of the United States.

/s/ H. R. Hochmuth
Associate Director

BUREAU ORDER DISTRIBUTION LIST

UNITED STATES
DEPARTMENT OF THE INTERIOR
Bureau of Land Management
Washington, D. C. 20240

In reply refer to:
1214.2 (6.02d-1)

January 9, 1964

ORDER No. 690, AMENDMENT No. 2

Subject: Delegation of Authority - Issuance of Patents

Effective immediately, the following persons are also authorized to issue patents or their equivalent in the name of the United States for grants of land under the authority of the Government, except patents and other conveyances which require the approval or signature of the President of the United States:

Alaska State Director
Nevada State Director

/s/ H. R. Hochmuth
Associate Director

BUREAU ORDER DISTRIBUTION LIST

1214.3
1862

UNITED STATES
DEPARTMENT OF THE INTERIOR
Bureau of Land Management
Washington 25, D. C.

December 17, 1962

ORDER NO. 690, Amendment No. 1

Subject: Delegation of authority - issuance of patents

Effective January 2, 1963, the following persons are also authorized to issue patents or their equivalent in the name of the United States for grants of land under the authority of the Government, except patents and other conveyances which require the approval or signature of the President of the United States.

Montana State Director
Montana Land Office Manager
New Mexico State Director
New Mexico Land Office Manager
Utah State Director
Utah Land Office Manager

/s/ Karl S. Landstrom

Director

Bureau Order Distribution List

27 F.R. 12687

1214.3
1862

UNITED STATES
DEPARTMENT OF THE INTERIOR
Bureau of Land Management
Washington 25, D. C.

December 14, 1961

ORDER NO. 690

Subject: Delegation of authority - issuance of patents

Pursuant to the authority contained in sec. 1.3 of Order 1512 of the Secretary of the Interior, the Arizona State Director and the Arizona Land Office Manager are authorized to issue patents or their equivalent in the name of the United States for grants of land under the authority of the Government scrip patents and other conveyances which require the approval or signature of the President of the United States. This delegation shall become effective January 2, 1962.

/s/ Karl S. Landstrom

Bureau Order Distribution List

1213.3
1710

[illegible]
[illegible]
Bureau of Land Management
Washington 25, D. C.

January 16, 1960

Bureau Order No. 691

Subject: Area of responsibility - Baker District Office

The area of responsibility of the District Office at Baker, Oregon, is enlarged to include the following described lands in the State of Washington.

Asotin County -

T. 7 N., Rgs. 47, 46 and 45 E., W.M. - All
T. 7 N., Rgs. 44 and 43 E., W.M. - That portion south and east of Umatilla National Forest
T. 6 N. Rgs. 47, 46, 45, 44 and 43 - All

Garfield County -

T. 6 N., R 42 E., W.M. - That portion south and east of Umatilla National Forest.

Failure remained as land application to be filed in the Baker office will continue to be filed at the land office at Spokane, Washington. The land office records for these lands will continue to be maintained at the Spokane Land Office.

[illegible]
[illegible]

Bureau Order Distribution List

1214.2
1843

UNITED STATES
DEPARTMENT OF THE INTERIOR
Bureau of Land Management
Washington 25, D. C.

March 1, 1962

Bureau Order No. 692

Subject: Delegation of Authority in Connection with Appeals to the Director, Bureau of Land Management

Sec. 1. Pursuant to the authority and subject to the limitations contained in 235 DM 1.1 Order No. 2583 of the Secretary of the Interior, the Chief, Division of Appeals of the Bureau of Land Management, and the Branch Chiefs of this Division, are authorized to sign all decisions and all correspondence involving appeals to the Director, Bureau of Land Management, filed pursuant to 43 CFR Parts 161 and 221.

Sec. 2. Bureau Order No. 683 of August 21, 1961, and any redelegations pursuant thereto, are hereby revoked.

s/ H. R. Hochmuth
Acting Director

Bureau Order Distribution List

Revoked by #702

Published FR 27 - 2186 - March 7, 1962

1541.3
1542.1

UNITED STATES
DEPARTMENT OF THE INTERIOR
Bureau of Land Management
Washington 25, D. C.

April 11, 1962

Bureau Order No. 693

Subject: Washington Office Mail Distribution Reference Codes

The correspondence code system is established for use on all correspondence and telegram originating in the Washington Office and all replies in response thereto. It is intended as an aid in the proper and expeditious distribution of these receipts upon receipt in the Director's mailroom.

Communications prepared in the field should not contain a Washington Office reference code unless they are in response to an inquiry or request bearing such a code. Correspondence originating in the field should contain only the Director's address line. A code predicate distribution to a certain office, and code shall not be used unless there has been previous correspondence on the specific subject from that office.

The following codes are published on the basis of division and branch procedures for receiving and distributing mail. Where only a division code is listed all branch mail is routed and processed through that division chief's office.

6.00	Director
6.01	Associate Director
6.02	Assistant Director, Administ[illegible]
6.02a	Division of Administrative S[illegible]
6.02b	Division of Budget and Finan[illegible]
6.02b-1	Branch of Budget
6.02b-2	Branch of Finance
6.02c	Division of Internal Audit
6.02e	Division of Management Analy[illegible]
[illegible]	Branch of Organization & Managem[illegible]
6.02d-2	Branch of Records Improvement
6.02d-3	Branch of Inspection
6.02e	Division of Personnel
6.03	Assistant Director, Lands & [illegible] Management
6.03a	Division of Appraisals
6.03b	Division of Lands & Recreation
6.03b-1	Branch of Operations and Pr[illegible]
6.03b-2	Branch of Classification
6.03b-3	Branch of Recreation
6.03c	Division of Minerals
6.03d	Division of Withdrawals
6.04	Assistant Director, Range and Forest Management
6.04a	Division of Forest Managem[illegible]
6.04b	Division of Protection
6.04c	Division of Range Management
[illegible]	Assistant Director, Operating Services
6.05a	Division of Engineering
6.05b	Division of Field Services
6.05b-1	Branch of Technical Services
[illegible]	Branch of Facilitating Servic[illegible]
6.05c	Division of Appeals
6.05d	Hearing Examiners
6.06	Assistant Director, Plans & Legislation
[illegible]	Division of Legislation and Regulations

Code	Office Title
6.06b	Division of Planning
6.07	Assistant to the Director
6.08	Office of Information

Bureau Order No. 576 is hereby cancelled in its entirety.

A. R. Hochmuth

Associate Director

BUREAU ORDER DISTRIBUTION LIST

16

UNITED STATES
DEPARTMENT OF THE INTERIOR
Bureau of Land Management
Washington, D. C.

In Reply Refer to:
733b:1153

June 29, 1965

TXM 1-245
7-25-66

Bureau Order No. 694, Amendment No. 2

Subject: Followup on audit findings

Section 4 is amended to read as follows:

All followup replies on audit reports from Field Administrative Offices and State Directors will be sent to the Division of Financial Management in an original and two copies. The replies to audit reports will be thorough and explain fully the corrective action taken. In cases of General Accounting Office audits, sufficient information will be provided to permit the Division of Financial Management to prepare a reply to the General Accounting Office. Formal replies to General Accounting Office reports will be issued only by the Washington Office. The Chief, Division of Financial Management will report to the Assistant Director, Administration, the corrective action taken on internal audit and General Accounting Office audit reports.

All inquiries from the General Accounting Office to a field office requiring a formal reply will be answered by the office to whom the inquiry is directed. The proposed reply will be forwarded to the Assistant Director, Administration, for review before it is released.

H. R. Hochmuth
Associate Director

BUREAU ORDER DISTRIBUTION LIST.

In Reply Refer To:
6.02b

1153

UNITED STATES
DEPARTMENT OF THE INTERIOR
Bureau of Land Management
Washington 25, D. C.

November 7, 1962

Bureau Order No. 694, Amendment No. 1

Subject: Followup on audit findings

Sec. 4 is amended to read as follows:

All followup replies on audit reports from Field Administrative Offices and State Directors will be sent to the Division of Budget and Finance in an original and two copies. The replies to audit reports will be thorough and explain fully the corrective action taken. In cases of General Accounting Office audits sufficient information will be provided to permit the Division of Budget and Finance to prepare a reply to the General Accounting Office. Formal replies to General Accounting Office reports will be issued only by the Washington Office. The Budget and Finance Officer will report to the Assistant Director, Administration, the corrective action taken on internal audit and General Accounting Office audit reports.

R. W. Hochmuth

Associate Director

BUREAU ORDER DISTRIBUTION LIST

UNITED STATES
DEPARTMENT OF THE INTERIOR
Bureau of Land Management
Washington 25, D. C.

May 16, 1962

Bureau Order No. 694

Subject: Followup on audit findings

Sec 1. Purpose. Outline procedures of those offices having audit followup responsibilities and to insure the information required is furnished the Director's office.

Sec. 2. Audit Responsibilities. Internal auditors are responsible for the audit of the activities of a financial nature of the Bureau. The General Accounting Office is responsible for auditing the activities, financial transaction, and accounts of the Federal Government.

Sec. 3 Followup Responsibility. The Division of Budget and Finance has final responsibility for followup on all audits. Field Administrative Officers and State Directors have initial responsibility within their respective geographical and functional areas. Field Administrative Officers and State Directors shall ascertain and inform the Assistant Director, Administration, within 30 days from receipt of an audit report, covering their office or offices, that corrective action has been taken to the extent that such offices have authority to take corrective measures. The Division of Budget and Finance will inititate action to modify

Bureau-wide procedures or to install new Bureau-wide procedures as may be required by the audit findings. The Field Administrative Officer will serve as the representative of the Assistant Director, Administration, in determining that appropriate corrective action has been taken on State audits. The Budget and Finance Officer will serve as the representative of the Assistant Director, Administration, in audit followup of Field Administrative Offices. Instructions for followup will be issued by the Assistant Director, Administration, after the replies to the audit reports have been considered by the Washington Office.

Sec. 4. Procedures. All followup replies on audit reports from Field Administrative Offices and State Directors will be sent to the Division of Budget and Finance. The replies to audit reports will be thorough and explain fully the corrective action taken. In cases of General Accounting Office audits they will provide sufficient information to permit the Division of Budget and Finance to prepare a reply to the General Accounting Office. Formal replies to General Accounting Office reports will be issued only by the Washington Office. The Budget and Finance Officer will report to the Assistant Director, Administration the corrective action taken on internal audit and General Accounting Office audit reports.

Sec. 5. Coordination. If an audit report includes matters other than of a financial nature, the Division of Budget and Finance will coordinate its reporting and other actions thereon with each division concerned. The Division of Budget and Finance

will also coordinate its actions and reporting with the Division of Management Analysis for follow-through or other consideration in the inspection program.

Sec. 6. Revocation. Bureau Order No. 662 dated February 23, 1960, is hereby revoked.

s/ J. P. Beirne
Acting Associate Director

BUREAU ORDER DISTRIBUTION LIST

6.02D-1

UNITED STATES
DEPARTMENT OF THE INTERIOR
Bureau of Land Management
Washington 25, D. C.

In Reply Refer To:
6.02b

July 31, 1962

ORDER NO. 696, Amendment No. 1 Superseded by BM Rel. 1-2

Subject: Per Diem Allowances

Sec. I.F.3. is amended to read as follows:

3. To and from official headquarters, and other travel away from field location, within the base state, and wherever commercial lodging is required, $13.00

Sec. I.G.3. is added as follows:

3. Travel to and from headquarters and elsewhere within the district apart from normal crew assignments, and travel on crew assignments where commercial lodging is required, $10.00

Sec. VII is amended to read as follows:

VII. Nothing in this order is to be interpreted as relaxing the responsibility of the officials designated in Bureau Order No. 689 to prescribe rates, within the maximums herein established except that the rate prescribed in I.D. shall be subject to adjustment by the Assistant Director, Administration, only.

Karl S. Landstrom
Director

BUREAU ORDER DISTRIBUTION LIST

UNITED STATES
DEPARTMENT OF THE INTERIOR
Bureau of Land Management
Washington 25, D. C.

In Reply Refer To:
6.02b

June 29, 1962

ORDER NO. 606 Superseded by BM Rel. 1-2

Subject: Per Diem Allowances

I. In accordance with the Secretary of the Interior's Order No. 2617, dated February 21, 1951, and section 6.2 of the Standardized Government Travel Regulations (Bureau of the Budget Circular No. A-7), the following maximum rates of per diem are prescribed for all travel authorized within this Bureau:

A. Washington Office Personnel $16.00

B. Auditors $14.00

C. Hearings Examiners $14.00

D. Advisory Board Members and others serving without compensation $16.00

E. State, District, Land, Records Improvement Project, and Field Administrative Office personnel;

1. Travel outside of base state, $16.00

2. Travel within base state, to be determined and fixed by each State Director, Records Improvement Project Manager, and Field Administrative Officer, within their respective areas of operations, but not to exceed $13.00

3. Attendance at meetings or conferences when approved in advance by the Director up to $16.00

4. Meetings with industry representatives in connection with Bureau business $16.00

5. Travel within district by district personnel $20.00

F. Cadastral Surveyors;

1. On field parties - no camp facilities, $ 9.00

2. On field parties - camp facilities $ 7.00

3. To and from official headquarters, and other travel away from field location, within the base state, $13.00

G. Range Survey and Soil & Moisture or similar crews;

1. Regular rate, $ 7.00

2. Camp rate, $ 6.00

H. Alaska personnel and other Bureau personnel traveling within the State of Alaska *

I. Departmental Management Training Program, Departmental Manager Development Program, and other Departmental training program participants;

1. From commencement of travel in a per diem status through a period of fourteen calendar days following arrival in Washington or other location of training, $16.00

2. After the fourteen day period, for the duration of the training program, $ 8.00

3. Participants who are sent on field assignments or special assignments $16.00

II. The per diem rates as prescribed in I.B.1., and 2., for travel outside of a base state or a district shall be effective immediately upon departure from headquarters on any trip where the

---

* Uniform rates are established in Bureau of the Budget Circular A-7.

first official duty point is outside of the base state or district. In cases where the first official duty point is within the base state or district, the state or district per diem rate, as appropriate, will prevail until the beginning of the day on which the traveler actually leaves the base state or district.

The same rule shall apply on return to base state or district. Where no official duty is performed on return to headquarters, the per diem rates for travel outside of a base state or a district will prevail until travel is completed, but where official duty is performed in the base state or district on the return trip, the state or district per diem rate, as appropriate, will become effective at the beginning of the day on which the base state is entered.

III. All rates prescribed except for I.E., C., D., F.1., F.2., G.1., G.2., and I.1. and 2., shall be reduced by one-fourth after sixty consecutive days at any one temporary duty station. Except that where conditions incident to travel in specific instances are such that a reduction in per diem at the end of sixty days would be prejudicial to the successful accomplishment of the travel assignment, the Assistant Director, Administration, may authorize or administratively approve a waiver of this provision.

A. In determination of the 60-day period, absence on official business from temporary duty station of more than three calendar days will constitute a break in the 60-day period. Annual leave, sick leave, leave without pay, and compensatory leave, shall not constitute a break in the 60-day period.

B. For purposes of this order, the term "any one temporary duty station" shall mean any point at which a traveler is performing duty and the immediate radius of forty miles.

IV. All meals except as prescribed in F.1., and G.1., shall be subject to a deduction of 15% for each meal, and 30% for each lodging furnished or made available by the Government.

V. Any of the rates prescribed in I. except for I.E.1. and I.E.2., may be waived by the Assistant Director, Administration, in any case where to his satisfaction a different rate, within the maximum allowable by law, is warranted.

VI. For purposes of establishment of per diem rates, the base state for the Bureau Office in St. Louis, Mo., will be the state of Arizona.

VII. Nothing in this order is to be interpreted as relieving the responsibilities of the officials designated in Bureau Order No. 600 in preparing rates, subject to review [illegible] establishment.

The designated officials, within their respective areas of authority, shall prescribe lesser rates where to their satisfaction lesser rates may be warranted. Such rates shall be established at amounts which represent neither an inadequate nor excessive reimbursement but which will fairly and adequately reimburse travelers on official business for the necessary actual expenses of such travel.

VIII. This order shall be effective July 1, 1962. Bureau Order No. 608, as amended, is revoked in its entirety.

/s/ Dean F. Davis

Acting Director

BUREAU ORDER DISTRIBUTION LIST

UNITED STATES
DEPARTMENT OF THE INTERIOR
Bureau of Land Management
Washington 25, D. C.

June 12, 1962

Order No. 695 Superseded by BM Rel. 1-2

Subject: Travel by privately-owned automobile

Order No. 624 dated January 25, 1957, and Amendment No. 1 dated May 13, 1957, are revoked in their entirety and are superseded by this order.

Having been administratively determined to be to the advantage of the Government, the following will be observed in authorizing the use of privately-owned automobiles:

A. Mileage

(1) To pay a flat rate of eight cents per mile for the use of a privately-owned automobile except in transfer of duty station or home leave, the latter pertaining to Alaska.

(2) To pay a rate of eleven cents per mile in connection with a transfer of duty station. If the employee himself does not travel in the automobile, this condition must be specifically authorized in the travel orders; otherwise, only an actual cost basis of transportation reimbursement, not in excess of common carrier costs, is allowable.

(3) To pay a rate of eleven cents per mile for the use of privately-owned automobile for the travel of new appointee and his immediate family from his place of actual residence at time of appointment to his place of employment in Alaska and for the use of privately-owned automobile when returning the employee from his place of employment in Alaska to his home station to the United States for purposes of home leave and return to Alaska, if otherwise allowable, subject to the following restrictions:

a. The amount to be reimbursed to the employee may not exceed the cost which would have been incurred

separate [illegible] and [illegible]
could not be [illegible]
would have been [illegible]
[illegible]

c. If the employee [illegible]
[illegible], [illegible] be [illegible]
authorized in the leave order; [illegible]
to actual cost basis of [illegible]
[illegible], not in excess of [illegible]
[illegible].

d. Annual leave shall be charged for any [illegible]
[illegible] time lost in travelling by private
automobile over that which would have been
lost the employee traveled by airplane to
[illegible] and return transportation thereto
[illegible]

[illegible]
the base station, the maximum allowable [illegible]
the cost of travelling by the most direct route
the point at which leave is taken, but not [illegible]
[illegible]
base station.

This order is effective this date.

[signature]

Acting Director

[illegible]

[illegible]

See memo
Inst. Memo 64-62
[illegible]

Hatch

[illegible]

[illegible]

[illegible]

S 29
St.

IN REPLY REFER TO:

1510-1.72
(732a)

UNITED STATES
DEPARTMENT OF THE INTERIOR
BUREAU OF LAND MANAGEMENT
WASHINGTON, D.C. 20240

August 22, 1966

BUREAU ORDER NO. 698, AMENDMENT NO. 12

SUBJECT: Delegation of Authority - Contracts and Leases

A new subparagraph (6) is added to Sec. 1(b), as follows:

Sec. 1. Authority of certain offices to enter into contracts and leases

* * * * *

(b)(6) The Director, Boise Interagency Fire Center is authorized to issue orders, regardless of amount, for equipment, supplies, and services, obtainable from General Services Administration Stores Stock, Federal Supply Schedules, and other established sources of supply. He is also authorized to make open market purchases for supplies, equipment and services, not exceeding $2,500 per transaction ($2,000 if for construction) pursuant to Sec. 302(c)(3) of the Federal Property and Administrative Services Act of 1949, as amended, provided that the supplies and services are not available from established sources. He is also authorized to enter into contracts exceeding $2,500 without advertising pursuant to Section 302(c)(2) of the Federal Property and Administrative Services Act of 1949, as amended, for rental of equipment and aircraft, and for purchase of supplies, and services and equipment (excluding vehicles) necessary for emergency fire suppression.

Section 2(a) is amended to read as follows:

Sec. 2. Redelegation of authority

(a) The Chief, Division of Administrative Services, the State Directors, the Directors, Service Centers, the Directors, Job Corps Conservation Centers, and the Director, Boise Interagency Fire Center may, in writing, redelegate to any qualified employees under their jurisdiction the authority delegated to them under section 1 above. Each redelegation, except redelegations for procurement by means of S.F. 44 Purchase Order-Invoice-Voucher, shall be published in the Federal Register.

/s/ Jerry A. O'Callaghan

Acting Associate Director

Bureau Order Distribution

Published in 31 F.R. 11496, August 31, 1966

31 FR 6551
4/30/66

UNITED STATES
DEPARTMENT OF THE INTERIOR
Bureau of Land Management
Washington, D. C. 20240

In Reply Refer To:
1214 (735)
1510-1.72

April 25, 1966

BUREAU ORDER NO. 698, AMENDMENT NO. 11

SUBJECT: Delegation of Authority - Contracts and Leases

A new subparagraph (8) is added to Section 1(b), as follows:

Sec. 1 Authority of certain offices to enter into contracts and leases

* * * * *

(b)(8) The Service Center Directors are authorized to negotiate contracts (a) for standby aerial tanker services, (b) after advertising, where no responsive bids have been received, and (c) after advertising, where responsive bids received do not cover the quantitative requirements of the invitation, in which case negotiation is permitted for the remainder. The above authority for negotiation is found in Section 302(c)(10) of the Federal Property and Administrative Services Act of 1949, as amended.

/s/ John O. Crow
Associate Director

BUREAU ORDER DISTRIBUTION LIST

UNITED STATES
DEPARTMENT OF THE INTERIOR
Bureau of Land Management
Washington, D.C. 20240

In Reply Refer To:
1510-1.72 (735a)

October 6, 1965

BUREAU ORDER NO. 698, AMENDMENT NO. 10

SUBJECT: Delegation of Authority - Contracts and Leases

A new subparagraph (7) is added to Section 1(b), as follows:

Sec. 1 Authority of certain offices to enter into contracts and leases

* * * * *

(b)(7) The Assistant Director, Administration, and the Chief, Division of Administrative Services, Washington Office are authorized (1) to enter into contracts pursuant to section 302(c)(10) of the Federal Property and Administrative Services Act of 1949, as amended, and (2) to grant authority to field Contracting Officers to enter into contracts pursuant to section 302(c)(10) of the Federal Property and Administrative Services Act of 1949, as amended, upon submission of a Determination and Findings by the field Contracting Officer.

/s/ J. P. Beirne

Acting Associate Director

BUREAU ORDER DISTRIBUTION LIST

70091

Sec
adm
Engr

UNITED STATES
DEPARTMENT OF THE INTERIOR
Bureau of Land Management
Washington, D. C. 20240

In reply refer to:
1510-1.72 (732a)

AUG 19 1965

BUREAU ORDER NO. 698, AMENDMENT NO. 9

SUBJECT: Delegation of Authority - Contracts and Leases

Subparagraph (3) of Section 1(a) and subparagraph (5) of Section 1(b) are amended to read as follows:

Sec. 1 Authority of certain offices to enter into contracts and leases

* * * * *

(a) (3) Are authorized under 205 DM 11.4B to negotiate contracts without advertising under paragraphs (2), (3), (4), (5) and (9) of section 302(c) of the Federal Property and Administrative Services Act of 1949, as amended.

* * * * *

(b)(5) The Directors, Job Corps Conservation Centers, under the jurisdiction of BLM are authorized to issue orders, regardless of amount, for equipment, supplies and services, obtainable from General Services Administration Stores Stock, Federal Supply Schedules, and other established sources of supply. They are also authorized to make open market purchases for supplies, equipment and services, not exceeding $2,500 per transaction ($2,000 if for construction), pursuant to Sec. 302(c) (3) of the Federal Property and Administrative Services Act of 1949, as amended, provided that the supplies and services are not available from established sources. They are further authorized to procure perishable or nonperishable subsistence supplies without dollar limitation under Sec. 302(c) (9) of the Federal Property and Administrative Services Act of 1949, as amended, provided that the supplies are not available from established sources.

J. P. Beirne
Associate Director

BUREAU ORDER DISTRIBUTION LIST

UNITED STATES
DEPARTMENT OF THE INTERIOR
Bureau of Land Management
Washington, D. C. 20240

In reply refer to:
1864 (732a)

BUREAU ORDER NO. 698, AMENDMENT NO. 8

SUBJECT: Contracts and Leases - Directors, Service Centers

Sections 1(a)(5) and 2(a) are amended by substituting, Directors, Service Centers, in lieu of Field Administrative Officers.

/s/ H. R. Hochmuth
Associate Director

July 1, 1965

BUREAU ORDER DISTRIBUTION LIST.

732-A

UNITED STATES
DEPARTMENT OF THE INTERIOR
Bureau of Land Management
Washington, D. C. 20240

May 28, 1965

BUREAU ORDER NO. 698, AMENDMENT NO. 7

SUBJECT: Delegation of Authority - Contracts and Leases

A new subparagraph (6) is added to Sec. 1(b), as follows:

Sec. 1. Authority of certain offices to enter into contracts and leases

* * * * *

(b)(6) The Director of Great Basin Fire Center is authorized to issue orders, regardless of amount, for equipment, supplies and services, obtainable from General Services Administration Stores Stock, Federal Supply Schedules, and other established sources of supply. He is also authorized to make open market purchases for supplies, equipment and services, not exceeding $2,500 per transaction ($2,000 if for construction) pursuant to Sec. 302(c)(3) of the Federal Property and Administrative Services Act of 1949, as amended, provided that the supplies and services are not available from established sources. He is further authorized to exceed $2,500 per transaction for procurement of aircraft and equipment rentals for purposes of emergency fire suppression.

Section 2(a) is amended to read as follows:

Sec. 2. Redelegation of authority

(a) The Field Administrative Officers, the Chief, Division of Administrative Services, the State Directors, the Directors, Job Corps Conservation Centers and the Director, Great Basin Fire Center may, in writing, redelegate to any qualified employees under their jurisdiction the authority delegated to them under Sec. 1 above. Each redelegation, except redelegations for procurement by means of S.F. 44 Purchase Order-Invoice-voucher, shall be published in the Federal Register.

/s/ L. T. Hoffman

Acting Associate Director

Bureau Order Distribution

SD
Engr
staff

UNITED STATES
DEPARTMENT OF THE INTERIOR
Bureau of Land Management
Washington, D. C. 20240

In reply refer to:
1510-1.72 (732a)

BUREAU ORDER NO. 698, AMENDMENT NO. 6

SUBJECT: Delegation of Authority - Contracts and Leases

A new subparagraph (5) is added to Sec. 1(b), as follows:

Sec. 1. Authority of certain offices to enter into contracts and leases

* * * * *

(b)(5) The Directors, Job Corps Conservation Centers, under the jurisdiction of BLM are authorized to issue orders, regardless of amount, for equipment, supplies and services, obtainable from General Services Administration Stores Stock, Federal Supply Schedules, and other established sources of supply. They are also authorized to make open market purchases for supplies, equipment and services, not exceeding $2,500 per transaction ($2,000 if for construction), pursuant to Sec. 302(c)(3) of the Federal Property and Administrative Services Act of 1949, as amended, provided that the supplies and services are not available from established sources.

Section 2(a) is amended to read as follows:

Sec. 2. Redelegation of authority

(a) The Field Administrative Officers, the Chief, Division of Administrative Services, the State Directors, and the Directors, Job Corps Conservation Centers may, in writing, redelegate to any qualified employees under their jurisdiction the authority delegated to them under Sec. 1 above. Each redelegation, except redelegations for procurement by means of S.F. 44 Purchase Order-Invoice-Voucher, shall be published in the Federal Register.

/s/ H. R. Hochmuth
Associate Director

February 4, 1965

BUREAU ORDER DISTRIBUTION LIST

UNITED STATES
DEPARTMENT OF THE INTERIOR
Bureau of Land Management
Washington, D. C. 20240

In reply refer to:
1510-1.72 (732a)

October 6, 1964

BUREAU ORDER NO. 698, AMENDMENT NO. 5

SUBJECT: Delegation of Authority - Contracts and Leases

A new subparagraph (4) is added to Sec. 1(b), as follows:

Sec. 1. Authority of certain offices to enter into contracts and leases

* * * * *

(b)(4) The Manager, Records Improvement Project, Littleton, Colorado, is authorized to issue purchase orders in amounts up to $2,500 for supplies and materials obtained under General Services Administration schedules, contracts, or other established sources. He is also authorized to issue purchase orders for supplies and services, without advertising, under Sec. 302(c)(3) of the Federal Property and Administrative Services Act of 1949, as amended (205 DM 11.4B), where the amount involved does not exceed $1,000 for each single transaction, and the items are not available under GSA schedules, contracts, or other established sources. Procurement of capitalized equipment is excluded from this authorization.

/s/ H. R. Hochmuth
Associate Director

BUREAU ORDER DISTRIBUTION LIST

1214.1
1510

UNITED STATES
DEPARTMENT OF THE INTERIOR
BUREAU OF LAND MANAGEMENT
Washington 25, D. C.

In Reply Refer to:
6.02d-1

June 12, 1963

Order No. 698, Amendment No. 4

Subject: Delegation of Authority - Contracts and Leases

Sec. 2(a) is amended to read as follows:

Sec. 2 Redelegation of Authority

(a) The Field Administrative Officers, Chief Division of Administrative Services and State Directors may, in writing, redelegate to any qualified employees under their jurisdiction the authority granted under Sec. 1 above. Each redelegation, except redelegations for procurement by means of S. F. 44 Purchase Order-Invoice-Voucher, shall be published in the Federal Register.

s/H. R. Hochmuth
Associate Director

BUREAU ORDER DISTRIBUTION

30494 - 63

1214.1
1510

UNITED STATES
DEPARTMENT OF THE INTERIOR
Bureau of Land Management
Washington 25, D. C.

February 25, 1963

Order No. 698, Amendment No. 3

Subject: Delegation of Authority - Contracts and Leases

Sec. 1(b)(3) is added as follows:

Sec. 1 Authority of Certain Offices to enter into Contracts and Leases

* * * * * * *

(b)(3) The heads of survey parties and land examiners in the Division of Field Services are authorized to enter into such contracts when the amount in any such contract does not exceed $500.

/s/ Karl S. Landstrom

Director

DISTRIBUTION
Bureau Order List

1214.1
1510

UNITED STATES
DEPARTMENT OF THE INTERIOR
Bureau of Land Management
Washington 25, D. C.

January 24, 1963

Order No. 698, Amendment No. 2

Subject: Delegation of Authority - Contracts and Leases

Sec. 1(b)(1) is amended to read as follows:

Sec. 1 Authority of Certain Offices to enter into Contracts and Leases.

* * * * *

(b)(1) The Managers of the local offices of the Bureau located at St. Paul, Minnesota, New Orleans, Louisiana, and Los Angeles, California are authorized to enter into such contracts when the amount in any such contract does not exceed $2,000.

/s/ Karl S. Landstrom

Director

Distribution:
Bureau Order List

DEPARTMENT OF THE INTERIOR
Bureau of Land Management
Washington 25, D. C.

August 11, 1967

Order No. 698, Amendment No. 1

Subject: Delegation of Authority - Contracts and Leases

1. Section 1(a)(5) is amended to read as follows:

Sec. 1 Authority of Certain Offices [illegible] and Leases.

* * * * *

(5) Those authorized to exercise the authority delegated by this section are:

Assistant Director, Administration
Chief, Division of Administrative Services
Field Administrative Officers
State Directors

2. Section 3 is amended to read as follows:

Sec. 3 Revocation.

Bureau Order 679 of June 27, 1961 and its subsequent amendments are revoked. Redelegations of authority pursuant to Order No. 679 not inconsistent with the delegations herein made shall continue in force until revoked or superseded.

Acting Associate Director

UNITED STATES
DEPARTMENT OF THE INTERIOR
Bureau of Land Management
Washington 25, D. C.

August 3, 1962

Order No. 598

Subject: Delegation of Authority - Contracts and Leases

Sec. 1 Authority of Certain Offices to enter into Contracts and Leases. (a) Pursuant to the authority contained in 200 DM 3.2; 205 DM 11.1A and B, 205 DM 11.4A(3); and Section 52 of Secretary's Order 2509, as amended, the classes of employees listed in subparagraph (b) below:

(1) Are authorized to enter into contracts for construction, supplies (including the rental of equipment) or services, irrespective of amount [1/] as provided in 205 DM 11.1A and B, and enter into leases of space in real estate as provided in Section 52 of Secretary's Order 2509, as amended.

(2) Are authorized under 205 DM 11.4A to negotiate contracts without advertising under 302(c)(1) of the Federal Property and Administrative Services Act of 1949, as amended, subject to the limitations set out in 205 DM 11.4A(2) and (3).

(3) Are authorized under 205 DM 11.4B to negotiate contracts without advertising under paragraphs (2), (3), (4) and (5) of section 302(c) of the Federal Property and Administrative Services Act of 1949, as amended.

1/ Two days advance telegraphic notice must be given to the Secretary of the Interior prior to the announcement of a pending award of any contract in excess of $10,000.

(4) Are authorized under 205 DM 11.4C to negotiate contracts of section 302(c)(14) of the Federal Property and Administrative Services Act of 1949, as amended.

(5) Those authorized to exercise the authority delegated by this section are:

See A.1

Assistant Director - Administration

Chief, Division of Administrative Services

Field Administrative Officers

A.2

(b) (1) The Managers of the local offices of the Bureau located at St. Paul, Minnesota, and New Orleans, Louisiana, are authorized to enter into such contracts when the amount in any such contract does not exceed $2,000.

(2) Hearing Examiners appointed to conduct hearings in accordance with the Federal Range Code (43 CFR Part 161) or the Department's rule of practice (43 CFR Part 221) are authorized to issue purchase orders for reporter's services, not to exceed $2,500 in cost for any one order, under any applicable contracts for stenographic reporting awarded by the Department or the General Services Administration; and to make open market purchases for such services not to exceed $1,500. Hearing Examiners are also authorized to enter into contracts for supplies and equipment when the amount in any such contract does not exceed $500 and the supplies and equipment involved are non-capitalized in nature.

Sec. 2 Redelegation of Authority. (a) The Field Administrative Officers, Chief, Division of Administrative Services and State Directors may, in writing, redelegate to any qualified employees under their

See A.4

[illegible]adiction the authority granted under Sec. 1 above. Each redelegation [illegible] be published in the Federal Register.

(b) Contracts and leases entered into under this authority [illegible] conform with applicable regulations and statutory requirements and [illegible]e subject to the availability of appropriations.

[illegible]

[illegible]icable limitations in the Federal Property and Administrative Services [illegible]

Sec. 3 Revocation. Bureau Order 679 of June 27, 1961, and its [illegible]bsequent amendments are hereby revoked.

See A. 1

/s/ H. R. Hochmuth

Associate Director

Superseded by BLM Manual Release 9-3 (9130.02

UNITED STATES
DEPARTMENT OF THE INTERIOR
Bureau of Land Management
Washington 25, D. C.

In reply refer to:
6.02d-1

August 24, 1962

Order No. 699

Subject: Delegation of Authority - Bureau Signs Program

Effective immediately the Division of Engineering is charged with the responsibility for establishment and control of the Bureau Signs Program. This is in recognition of the growing need for, and importance of, effective signs in the operations of the Bureau.

This responsibility includes control of the standard signs program, signs design, approval of all proposed new signs, development of guidelines for field operations pertaining to the use of signs, determination that all signs are adequate and consistent with the objectives of the Bureau, and such other actions as are necessary for proper administration of the program.

The Division of Management Analysis, cooperating with the Division of Engineering, is responsible for numbering, printing, and initial issue of all standard Bureau signs. The Denver Field Administrative Officer is responsible for their stocking and supply.

Each function will continue to be responsible for the use and development of signs needed to adequately and effectively carry out its programs. The cost of sign construction and maintenance will be borne by the activity or project that it benefits.

K. R. Hochmuth
Associate Director

DISTRIBUTION:

Bureau Order List

File

732A

IN REPLY REFER TO:

1510-1.72
(732a)

UNITED STATES
DEPARTMENT OF THE INTERIOR
BUREAU OF LAND MANAGEMENT
WASHINGTON, D.C. 20240

August 22, 1966

BUREAU ORDER NO. 698, AMENDMENT NO. 12

SUBJECT: Delegation of Authority - Contracts and Leases

A new subparagraph (6) is added to Sec. 1(b), as follows:

Sec. 1. Authority of certain offices to enter into contracts and leases

* * * * *

(b)(6) The Director, Boise Interagency Fire Center is authorized to issue orders, regardless of amount, for equipment, supplies, and services, obtainable from General Services Administration Stores Stock, Federal Supply Schedules, and other established sources of supply. He is also authorized to make open market purchases for supplies, equipment and services, not exceeding $2,500 per transaction ($2,000 if for construction) pursuant to Sec. 302(c)(3) of the Federal Property and Administrative Services Act of 1949, as amended, provided that the supplies and services are not available from established sources. He is also authorized to enter into contracts exceeding $2,500 without advertising pursuant to Section 302(c)(2) of the Federal Property and Administrative Services Act of 1949, as amended, for rental of equipment and aircraft, and for purchase of supplies, and services and equipment (excluding vehicles) necessary for emergency fire suppression.

Section 2(a) is amended to read as follows:

Sec. 2. Redelegation of authority

(a) The Chief, Division of Administrative Services, the State Directors, the Directors, Service Centers, the Directors, Job Corps Conservation Centers, and the Director, Boise Interagency Fire Center may, in writing, redelegate to any qualified employees under their jurisdiction the authority delegated to them under section 1 above. Each redelegation, except redelegations for procurement by means of S.F. 44 Purchase Order-Invoice-Voucher, shall be published in the Federal Register.

/s/ Jerry A. O'Callaghan

Acting Associate Director

Bureau Order Distribution

Published in 31 F.R. 11496, August 31, 1966